DRAWING
C139353 RevA

Series 8250 (DS0H)
Non-Emission Engine Models

Learn more about Series 8250 Fire Pumps

-A- - MOUNTING FACE OF FLYWHEEL
-B- - ENGINE CRANKSHAFT HORIZONTAL CENTERLINE
-C- - ENGINE CRANKSHAFT VERTICAL CENTERLINE
-D- - PUMP SHAFT HORIZONTAL CENTERLINE

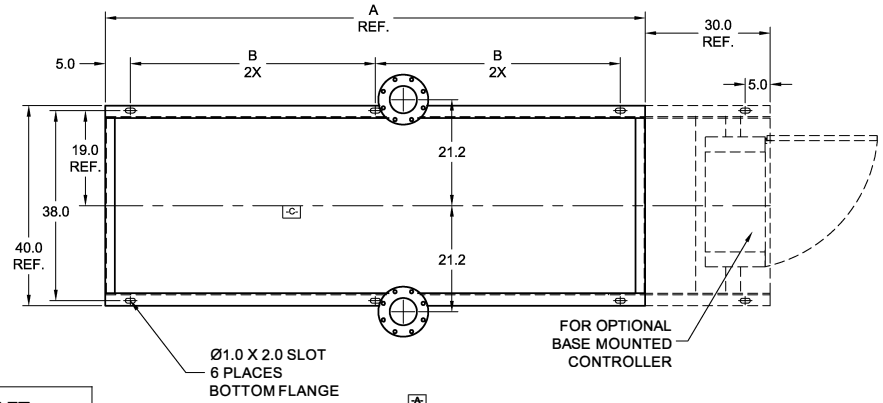

NON-LISTED DRIVESHAFT	
ENGINE MODEL	DRIVESHAFT MODEL
DS0H-UFAAN0, -UFAA68, -UFAA60, -UFAAM0	SC2160A

ITEM NO.	DESCRIPTION	CONNECTION SIZE
1	EXHAUST OUTLET CONNECTION	5" 150# FLG.
2	RAW WATER OUTLET	SEE NOTE 6.
3	FUEL SUPPLY CONNECTION	3/4" NPTF
4	FUEL RETURN CONNECTION	1/2" NPTF
5	HEATER JUNCTION BOX	VOLTAGE REQUIREMENTS: AC CONNECTION HEATER 2500 WATTS STD- 230 VAC ±5%-10%

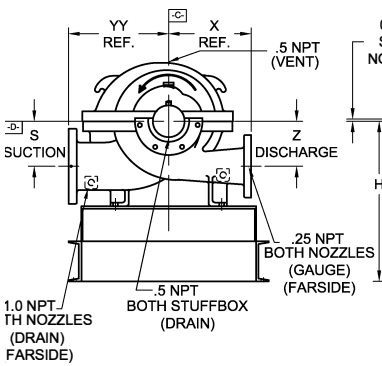

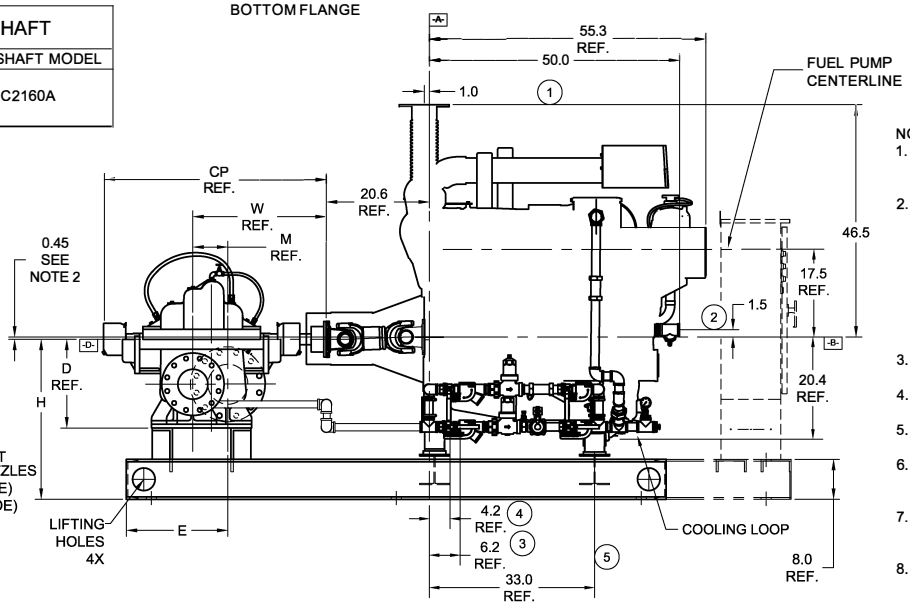

NOTES:
1. GENERAL TOLERANCE: UNLESS OTHERWISE SPECIFIED, ALL DIMENSIONS ARE IN INCHES AND VARY 0.38".
2. THE DRIVE SHAFT IS DESIGNED TO OPERATE AT A 2° ANGLE WITH THE INPUT AND OUTPUT SHAFTS IN PARALLEL. THE ENGINE CRANKSHAFT IS TO BE SET WITH A PARALLEL OFFSET OF 0.45 ± 0.15 INCHES VERTICALLY ABOVE THE PUMP SHAFT AND 0.00" ± 0.15 INCH PARALLEL OFFSET HORIZONTALLY RIGHT OR LEFT OF THE PUMP SHAFT. REFER TO THE CERTIFIED DRIVESHAFT INSTRUCTIONS MANUAL FOR ALIGNMENT INSTRUCTIONS.
3. BASE MUST BE COMPLETELY FILLED WITH GROUT PER NFPA 20.
4. PUMP IS CW (CLOCKWISE) ROTATION WHEN VIEWED FROM THE COUPLING END.
5. SUCTION AND DISCHARGE FLANGES DRILLED PER ANSI B16.1 (IF APPLICABLE).
6. RAW WATER DRAIN PIPING SIZE VARIES BASED UPON SITE CONDITIONS. ENGINE CONN. SIZE: 1-1/2" NPT.
7. CAUTION: ALL PLUMBING MUST BE SUPPORTED AND/OR ISOLATED SO THAT NO WEIGHT OR STRESS IS APPLIED TO ANY ENGINE COMPONENT.
8. CAUTION: SPREADER BARS REQUIRED TO MOVE PACKAGE. DAMAGE DUE TO IMPROPER HANDLING IS NOT WARRANTABLE.

PUMP TYPE	PUMP SIZE		DIMENSIONS											
	SUCT.	DISCH.	A	B	H	E	M	W	CP	D	YY	X	S	Z
8x6x13F	8	6	118.0	54.0	32.0	27.2	23.2	22.8	46.0	18.5	26.0	20.0	9.0	9.0

ALL VIEWS 3rd ANGLE PROJECTION

NOT FOR CONSTRUCTION, INSTALLATION OR APPLICATION PURPOSES UNLESS CERTIFIED.

CERTIFIED FOR:						APPROVAL	UL ☐ FM ☐ ULC ☐	
CUSTOMER ORDER NO:			IDENTIFICATION NO:				FLANGES	
PUMP DATA	SIZE	MODEL	CURVE NO.	GPM	HEAD (FT.)	ROTATION	SUCTION	DISCHARGE
						CW		
ENGINE DATA	MAKE	MODEL	HP	RPM	VOLTAGE	POLARITY	MAX ALTITUDE	
	CLARKE					NEG.		
SHOP ORDER:		CERTIFIED BY:			TOTAL WEIGHT		DATE:	

Xylem Inc.
www.xylem.com/acfirepump
Xylem and A-C Fire Pump are trademarks or registered trademarks of Xylem Inc. or one of its subsidiaries. All other trademarks or registered trademarks are property of their respective owners.
© 2024 Xylem Inc. C139353 RevA October 2024