GOULDS WATER TECHNOLOGY
a xylem brand

SUBMITTAL

M-501.26

JOB:	**REPRESENTATIVE:**	
UNIT TAG:	**ORDER NO.**	**DATE:**
ENGINEER:	**SUBMITTED BY:**	**DATE:**
CONTRACTOR:	**APPROVED BY:**	**DATE:**

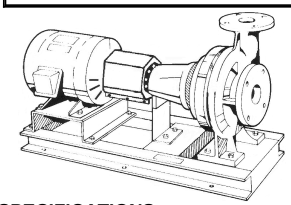

5-9D
Marlow Series e-530SL
Centrifugal Pumps - Base Mounted

SPECIFICATIONS

FLOW _____ HEAD _____

HP _____ RPM _____

VOLTS _____

CYCLE _____ PHASE _____

ENCLOSURE _____

APPROX. WEIGHT _____

SPECIALS _____

MATERIALS OF CONSTRUCTION

☒ Stainless Steel Fitted

FEATURES

☒ ANSI/OSHA Coupling Guard

☒ Center Drop Out Spacer Coupling

☒ Fabricated Heavy Duty Baseplate

MAXIMUM WORKING PRESSURE

☐ 175 psi (12 bar) W.P.
w/ 125# ANSI flange drilling

TYPE OF SEAL

☐ Standard Seal
(Buna-Carbon/Ceramic)

☐ -F Standard Seal w/ Flush Line
(Buna-Carbon/Ceramic)

☐ -S Stuffing Box Construction w/ Flushed Mechanical Single Seal
(EPR-Tungsten Carbide/Carbon)

☐ -PF Stuffing Box Construction w/ Packing
(Graphite Impregnated Teflon)

Note: Equipped with NEOPRENE coupling

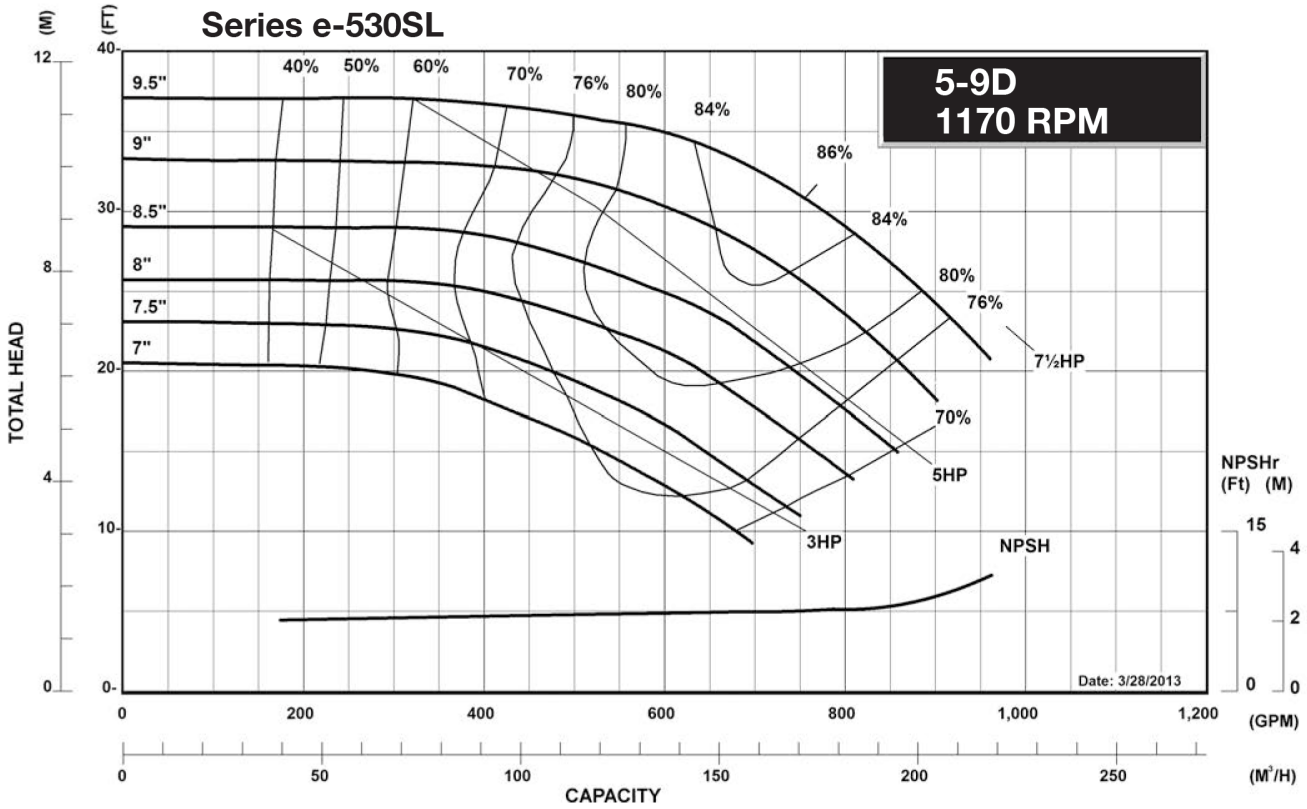

GOULDS WATER TECHNOLOGY
a xylem brand

SUBMITTAL

M-501.26B

JOB:	**REPRESENTATIVE:**	
UNIT TAG:	**ORDER NO.**	**DATE:**
ENGINEER:	**SUBMITTED BY:**	**DATE:**
CONTRACTOR:	**APPROVED BY:**	**DATE:**

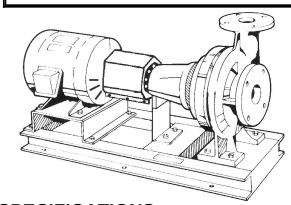

5-9D
Marlow Series e-530SL
Centrifugal Pumps - Base Mounted

SPECIFICATIONS

FLOW _____ HEAD _____

HP _____ RPM _____

VOLTS _____

CYCLE _____ PHASE _____

ENCLOSURE _____

APPROX. WEIGHT _____

SPECIALS _____

MATERIALS OF CONSTRUCTION

☒ Stainless Steel Fitted

FEATURES

☒ ANSI/OSHA Coupling Guard

☒ Center Drop Out Spacer Coupling

☒ Fabricated Heavy Duty Baseplate

MAXIMUM WORKING PRESSURE

☐ 175 psi (12 bar) W.P.
w/ 125# ANSI flange drilling

TYPE OF SEAL

☐ Standard Seal
(Buna-Carbon/Ceramic)

☐ -F Standard Seal w/ Flush Line
(Buna-Carbon/Ceramic)

☐ -S Stuffing Box Construction w/ Flushed Mechanical Single Seal
(EPR-Tungsten Carbide/Carbon)

☐ -PF Stuffing Box Construction w/ Packing
(Graphite Impregnated Teflon)

Note: Equipped with NEOPRENE coupling

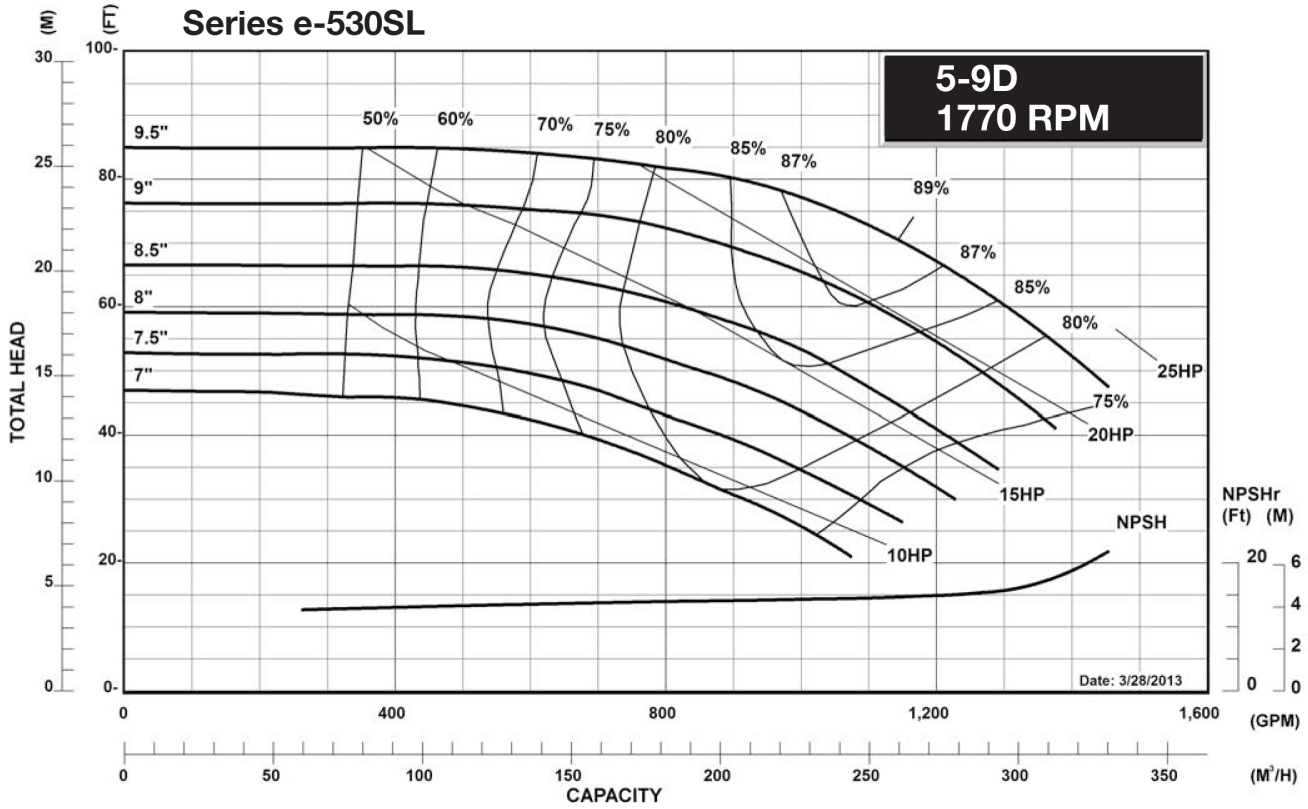

Marlow Series e-530SL 5-9D Centrifugal Pump Submittal

M-501.26

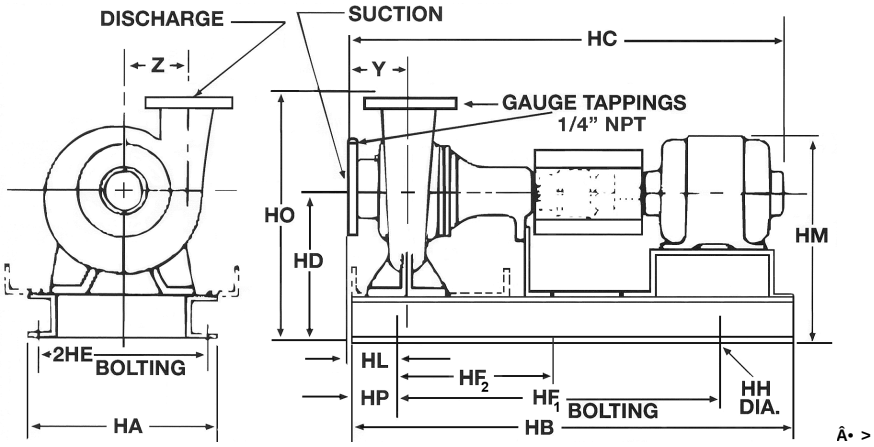

FLANGE DIMENSIONS IN INCHES (MM)			
	SIZE	THICKNESS	O.D.
Discharge	5" (127)	1-3/8" (35)	10-3/4" (273)
Suction	6" (152)	1-7/16" (37)	12-1/8" (308)

FLANGES ARE 125# ANSI - STANDARD
250# ANSI - AVAILABLE

DIMENSIONS - Inches (mm) **STANDARD SEAL**

MOTOR FRAME	HA	HB	HC MAX	HD	2HE	HF_1	HF_2	HH	HL	HM MAX	HO	HP	Y	Z
	"S" FRAME													
213T	16 (406)	46-1/2 (1181)	39-1/8 (994)	15 (381)	14 (356)	36-1/2 (927)	18-1/4 (464)	7/8 (22)	4-9/16 (116)	20-7/8 (530)	25 (635)	5 (127)	6 (152)	7-1/2 (190)
215T	16 (406)	46-1/2 (1181)	40-5/8 (1032)	15 (381)	14 (356)	36-1/2 (927)	18-1/4 (464)	7/8 (22)	4-9/16 (116)	20-7/8 (530)	25 (635)	5 (127)	6 (152)	7-1/2 (190)
254T	16 (406)	46-1/2 (1181)	44-3/8 (1127)	15 (381)	14 (356)	36-1/2 (927)	18-1/4 (464)	7/8 (22)	4-9/16 (116)	21-7/8 (556)	25 (635)	5 (127)	6 (152)	7-1/2 (190)
	"L" FRAME													
256T	16 (406)	46-1/2 (1181)	50-1/2 (1283)	15 (381)	14 (356)	36-1/2 (927)	18-1/4 (464)	7/8 (22)	6-7/16 (164)	21-7/8 (556)	25 (635)	5 (127)	6 (152)	7-1/2 (190)
284T	16 (406)	51-3/4 (1314)	51-1/8 (1299)	15 (381)	14 (356)	41-3/4 (1060)	20-7/8 (530)	7/8 (22)	6-7/16 (164)	23 (584)	25 (635)	5 (127)	6 (152)	7-1/2 (190)
286T	16 (406)	51-3/4 (1314)	52-1/2 (1333)	15 (381)	14 (356)	41-3/4 (1060)	20-7/8 (530)	7/8 (22)	6-7/16 (164)	23 (584)	25 (635)	5 (127)	6 (152)	7-1/2 (190)

STUFFING BOX

MOTOR FRAME	HA	HB	HC MAX	HD	2HE	HF_1	HF_2	HH	HL	HM MAX	HO	HP	Y	Z
	"L" FRAME													
213T	16 (406)	46-1/2 (1181)	45-7/8 (1165)	15 (381)	14 (356)	36-1/2 (927)	18-1/4 (464)	7/8 (22)	6-7/16 (163)	20-7/8 (530)	25 (635)	5 (127)	6 (152)	7-1/2 (190)
215T	16 (406)	46-1/2 (1181)	47-3/8 (1203)	15 (381)	14 (356)	36-1/2 (927)	18-1/4 (464)	7/8 (22)	6-7/16 (163)	20-7/8 (530)	25 (635)	5 (127)	6 (152)	7-1/2 (190)
254T	16 (406)	51-3/4 (1314)	51-1/8 (1298)	15 (381)	14 (356)	41-3/4 (1060)	20-7/8 (530)	7/8 (22)	6-7/16 (163)	21-7/8 (555)	25 (635)	5 (127)	6 (152)	7-1/2 (190)
256T	16 (406)	51-3/4 (1314)	52-7/8 (1343)	15 (381)	14 (356)	41-3/4 (1060)	20-7/8 (530)	7/8 (22)	6-7/16 (163)	21-7/8 (555)	25 (635)	5 (127)	6 (152)	7-1/2 (190)
284T	16 (406)	51-3/4 (1314)	53-5/8 (1362)	15 (381)	14 (356)	41-3/4 (1060)	20-7/8 (530)	7/8 (22)	6-7/16 (163)	23 (584)	25 (635)	5 (127)	6 (152)	7-1/2 (190)
286T	16 (406)	51-3/4 (1314)	55 (1397)	15 (381)	14 (356)	41-3/4 (1060)	20-7/8 (530)	7/8 (22)	6-7/16 (163)	23 (584)	25 (635)	5 (127)	6 (152)	7-1/2 (190)

Dimensions are subject to change. Not to be used for construction purposes unless certified.

Xylem Inc.
8200 N. Austin Avenue
Morton Grove, IL 60053
Phone: (847)966-3700
Fax: (847)965-8379
www.gouldswatertechnology.com

xylem
Let's Solve Water

Goulds is a registered trademark of Goulds Pumps, Inc. and is used under license.
© 2016 Xylem Inc.