60 Hz



SCUBA Series

CLOSE-COUPLED SUBMERSIBLE ELECTRIC PUMPS

Cod. 191015701 Rev. A Ed.06/2017

LOWARA
a xylem brand

LOWARA
a xylem brand

CONTENTS

Specifications..... **5**

Identification code and rating plate..... **8**

Hydraulic performance range..... **9**

Dimensions and weights..... **10**

Motor - control panel combination table..... **12**

Technical appendix..... **13**

LOWARA
a xylem brand

SCUBA SERIES
HYDRAULIC PERFORMANCE RANGE AT 60 Hz

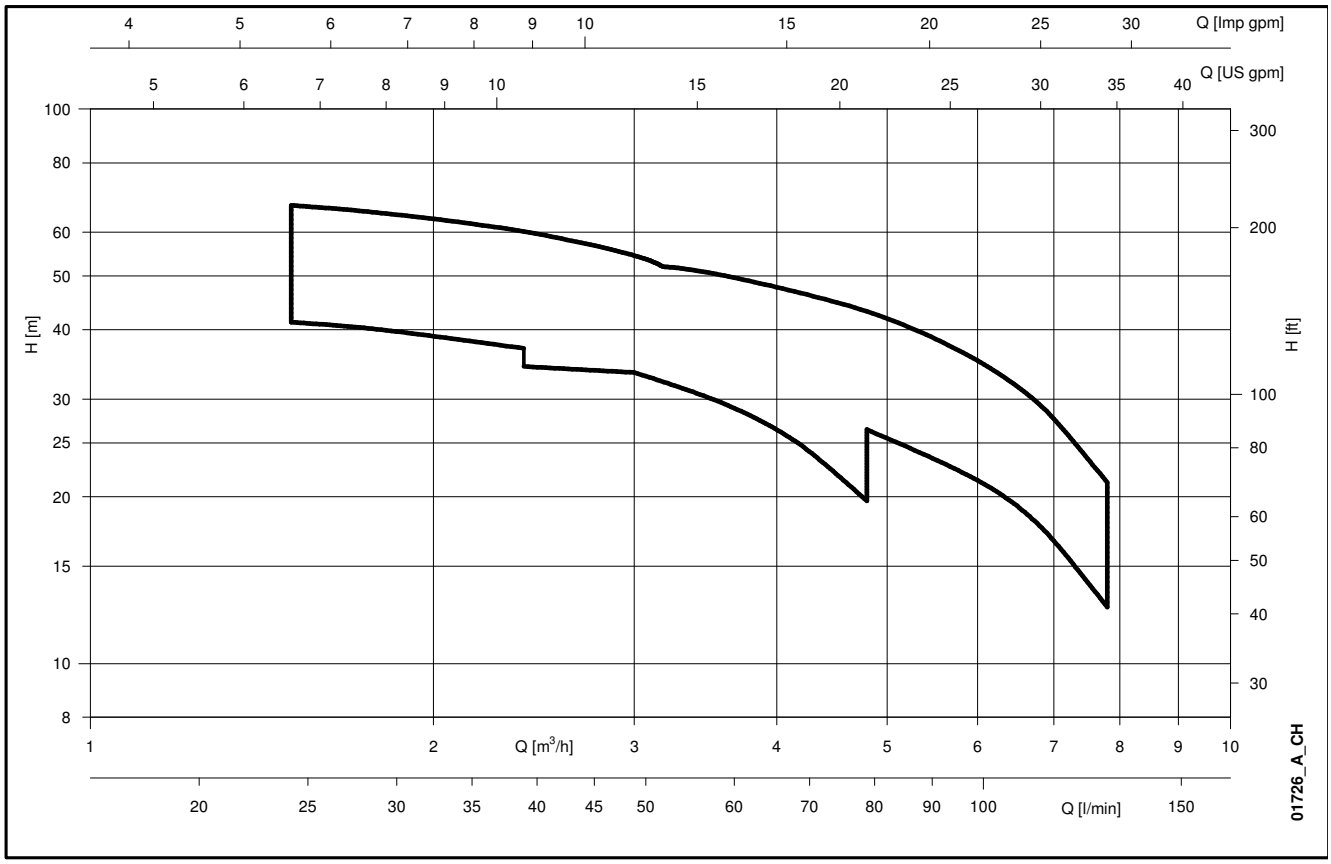

LOWARA
a xylem brand

Close-coupled submersible electric pumps SCUBA Series

MARKET SECTORS
RESIDENTIAL, AGRICULTURE, INDUSTRY.

APPLICATIONS
- Water supply from primary water supply tanks or reservoirs, 6" wells, basins and watercourses.
- Sprinkler irrigation systems.
- Pressure boosting with pump directly inserted in tank or well, to avoid suction problems and noise.
- Rain water harvesting
- Car washing system



- **Self cooling motor**
- **Double seal**
- **Built-in capacitor and motor protection**
- **Easy to install**
- **Silent operation**

SPECIFICATIONS

PUMP
- **Delivery**: up to 8 m^3/h at 3450 rpm.
- **Head**: up to 75 m at 3450 rpm.
- **Maximum overall diameter of elec tric pump**: 128 mm.
- **Maximum immersion depth:** 20 m.
- **Maximum permissible quantity of suspended sand:** 25 g/m^3.
- **Passes solids**: up to 2,5 mm.
- **Delivery port:** Rp 1 1/4.
- **Motor power :** 0,75 to 1,1 kW.

MOTOR
- **Single-phase version**: 220-240 V, 60 Hz
- With built-in automatic reset overload ad protection.
- With built-in capacitor.
- **Three-phase version**: 220-230 / 380-415 V, 60 Hz; overload protection to be provided by user and installed in the control panel (see electric panel section).
- Maximum supply voltage variations: ±5%.
- **Classe F** insulation.
- Can also operate in **horizontal position**.
- Maximum number of **starts per hour**, evenly distributed: 25 for motors up to 0,9 kW. 20 for motors 1,1 kW.
- Maximum **temperature** of water in contact with the motor: **40°C** (continuos use).

CONTRUCTION CHARACTERISTICS
- Close-coupled, multiple impeller submersible electric pump. The liquid end is located underneath the electric motor, which is cooled by the pumped liquid.
- Impellers are radial centrifugal type, made of technopolymer.
- AISI 304 stainless steel diffusers.
- Outer sleeve, motor casing, suction screen and shaft extension are made of AISI 304 stainless steel.
- **Dry motor**. The electric motor is protected by a double seal system with an oil chamber. The silicon carbide mechanical seal, highly resistant to abrasion and wear, together with the second mechanical seal, lubricated thanks to the special configuration of the oil chambers, guarantee long-lasting reliability.

OPTIONAL FEATURES
- Pre assembled float switch
- Kit with inverter ResiBoost
- External capacitor

LOWARA
a xylem brand

SCUBA SERIES
PUMP SECTION AND LIST OF MAIN COMPONENTS

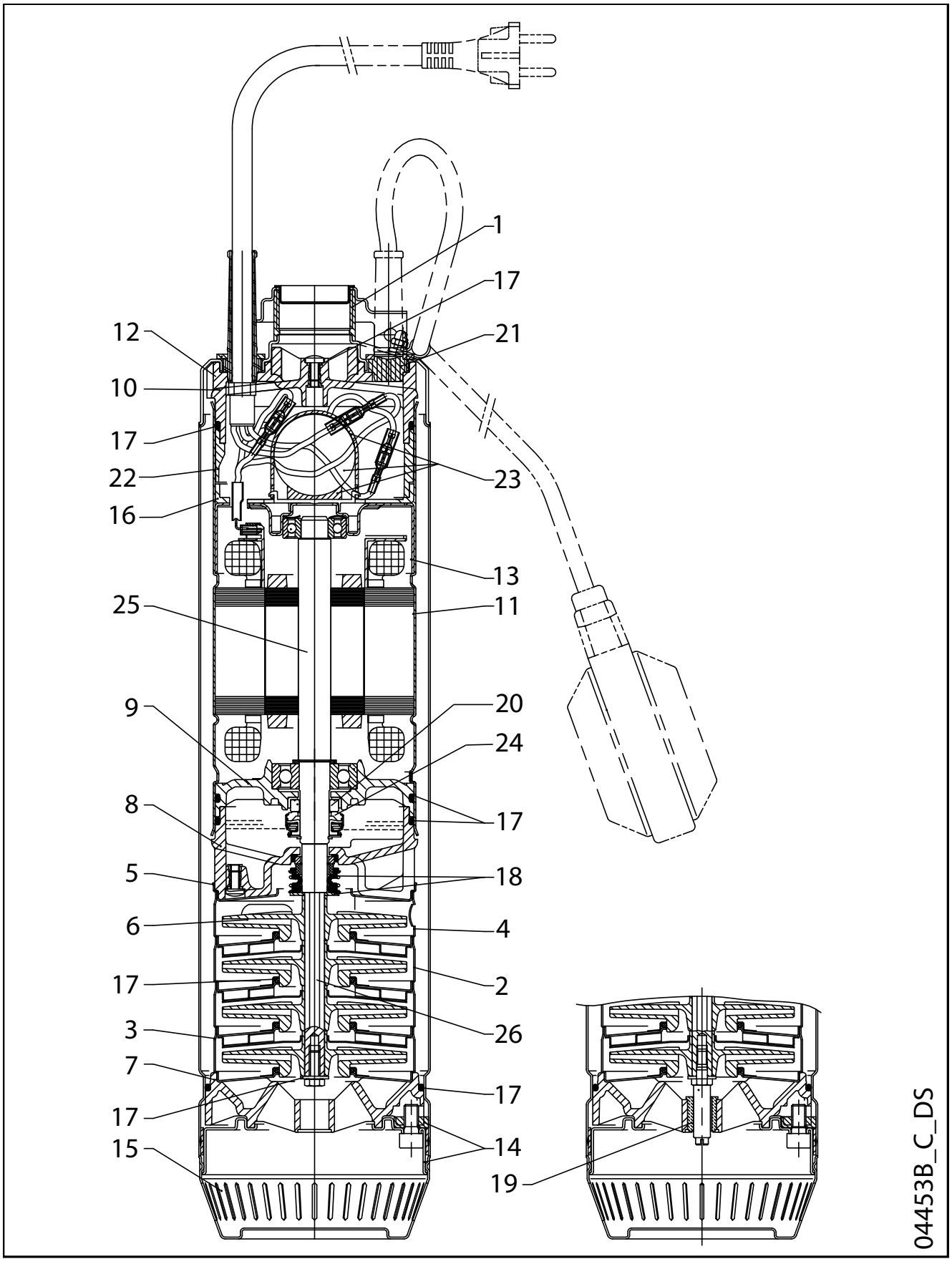

LOWARA
a xylem brand

SCUBA SERIES
TABLE OF MATERIALS

N°	NAME	MATERIAL	REFERENCE STANDARD	
			EUROPE	USA
1	Sleeve with head	Stainless steel	EN 10088-1-X5CrNi18-10 (1.4301)	AISI 304
2	Diffuser	Stainless steel	EN 10088-1-X5CrNi18-10 (1.4301)	AISI 304
3	Initial bowl	Stainless steel	EN 10088-1-X5CrNi18-10 (1.4301)	AISI 304
4	Final diffuser	Stainless steel	EN 10088-1-X5CrNi18-10 (1.4301)	AISI 304
5	Final bowl	Stainless steel	EN 10088-1-X5CrNi18-10 (1.4301)	AISI 304
6	Impeller	Tecnopolymer PPO		
7	Bearing spider	Tecnopolymer PPS		
8	Lower head	Tecnopolymer PPS		
9	Lower bearing support	Die-cast aluminium		
10	Motor head	Polymer PPS		
11	Sleve with wound stator	Stainless steel	EN 10088-1-X5CrNi18-10 (1.4301)	AISI 304
12	Upper head	Tecnopolymer PPS		
13	Bearing support upper	Stainless steel	EN 10088-1-X5CrNi18-10 (1.4301)	AISI 304
14	Complete falnge			
15	Filter	Stainless steel	EN 10088-1-X5CrNi18-10 (1.4301)	AISI 304
16	Connection container			
17	Elastomers	Nitrile rubber (NBR)		
18	External mechanical seal	Silicon carbide		
19	Bush bearing	Tecnopolymer PU		
20	Internal mechanical seal (fixed part)	Steatite		
21	Cable entry complete parts			
22	Capacitor housing spacer	PA66-GF35		
23	Capacitor			
24	Internal mechanical seal (rotary part)	Carbo-graphite		
25	Motor shaft	Acciaio inox	EN 10088-3-X17CrNi16-2 (1.4057)	AISI 431
26	Pump shaft	Acciaio inox	EN 10088-1-X5CrNi18-10 (1.4301)	AISI 304

scuba-sc2-sc4-2p50-en_c_tm

LOWARA
a xylem brand

SCUBA SERIES
IDENTIFICATION CODES

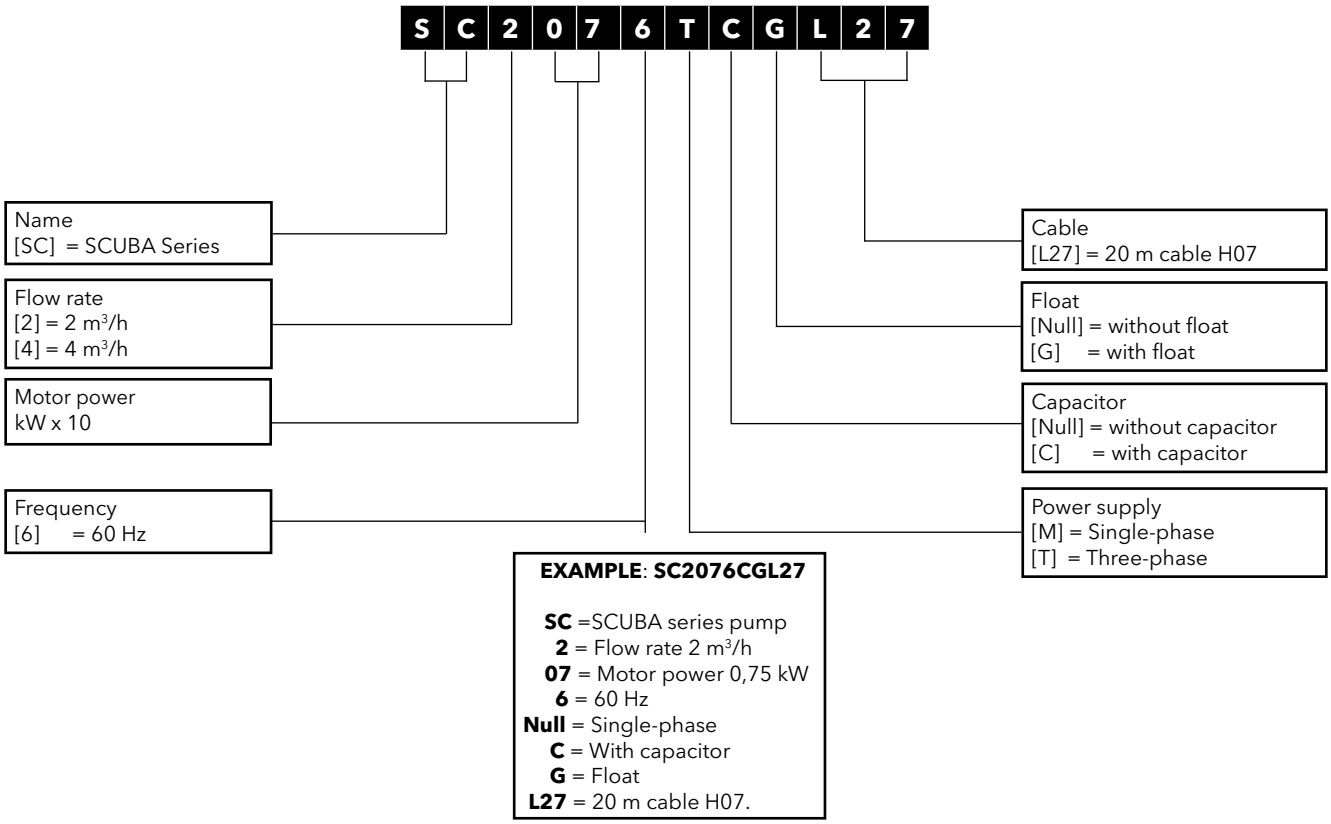

SINGLE-PHASE RATING PLATE

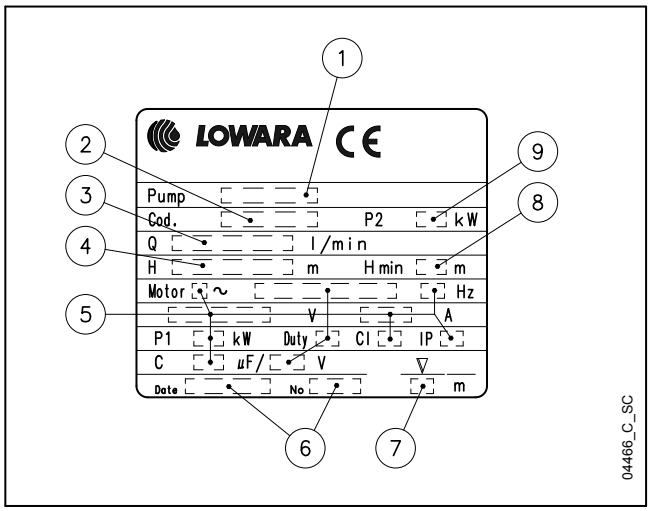

THREE-PHASE RATING PLATE

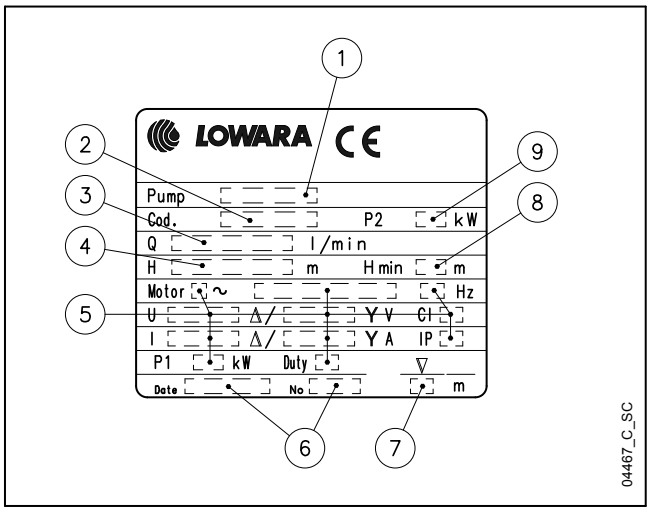

LEGEND

1 - Electric pump type
2 - Code
3 - Delivery range
4 - Head range
5 - Characteristics motor
6 - Manufacturing data and serial number
7 - Maximum immersion depth
8 - Minimum head
9 - Rated output

LOWARA
a xylem brand

SCUBA SERIES
HYDRAULIC PERFORMANCE RANGE AT 60 Hz

SC2 - SC4	~ 3450 [rpm]	ISO 9906:2012 - Grade 3B

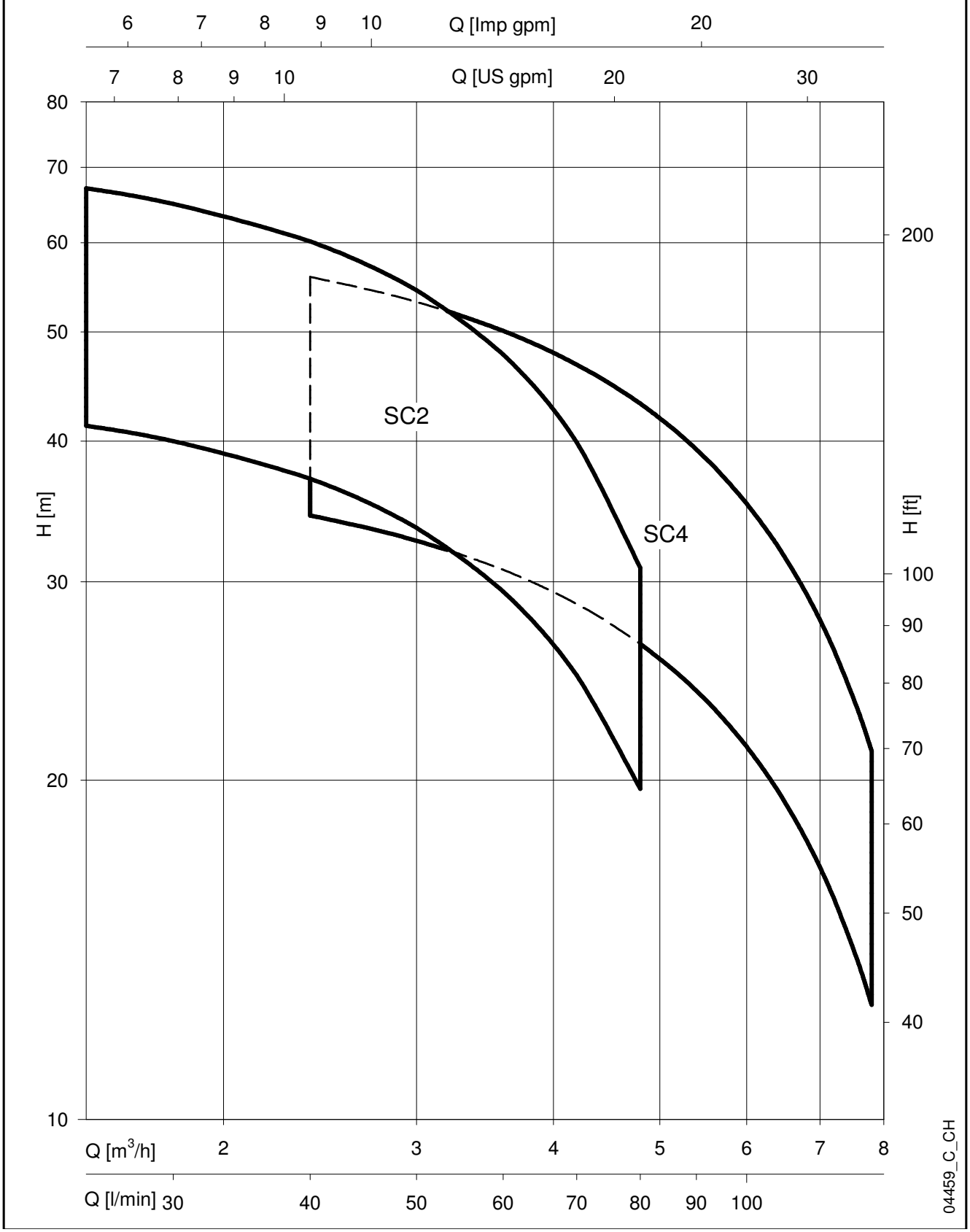

LOWARA
a xylem brand

SCUBA SERIES
DIMENSIONS AND WEIGHTS AT 60 Hz

PUMP TYPE		N. OF STAGES	DIMENSIONS L	WEIGHT
SINGLE-PHASE	THREE-PHASE		mm	kg
SC2076C	SC2076T	3	516	17,5
SC2096C	SC2096T	4	541	16,3
SC2116C	SC2116T	5	586	17
SC4076C	SC4076T	3	516	17
SC4096C	SC4096T	4	541	16
SC4116C	SC4116T	5	586	18

scuba-sc2-sc4-2p60_c_td

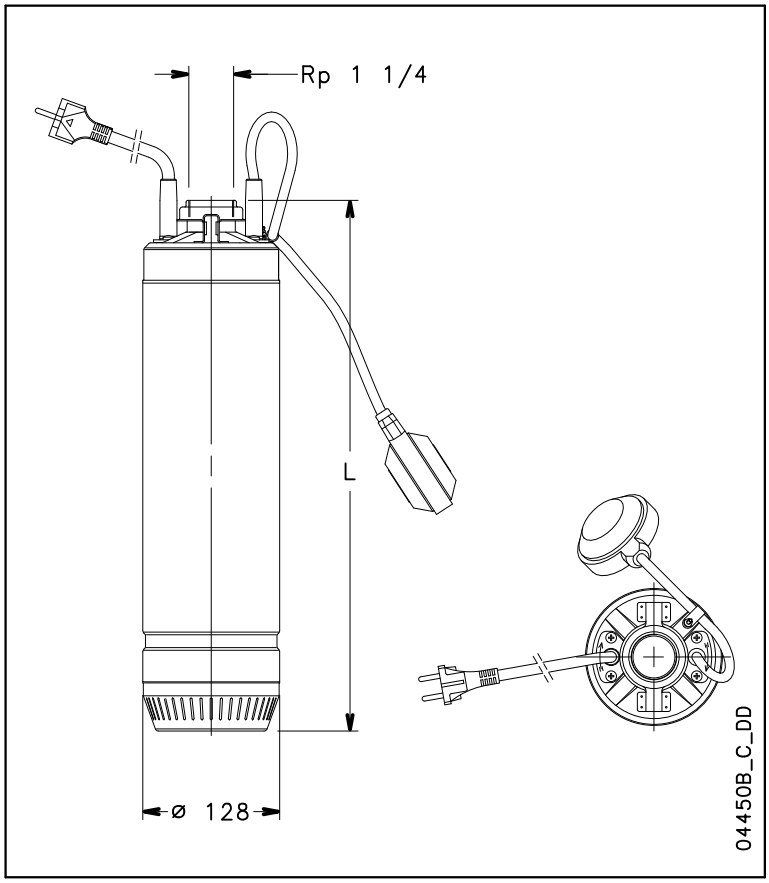

PUMP TYPE	CROSS SECTION	CABLE TYPE	CABLE LENGHT
SC2076C	3G1	H07RN-F	10 m or 20 m
SC2096C	3G1.5	H07RN-F	
SC2116C	3G1.5	H07RN-F	
SC4076C	3G1	H07RN-F	
SC4096C	3G1.5	H07RN-F	
SC4116C	3G1.5	H07RN-F	
SC2076T	4G1	H07RN-F	
SC2096T	4G1	H07RN-F	
SC2116T	4G1	H07RN-F	
SC4076T	4G1	H07RN-F	
SC4096T	4G1	H07RN-F	
SC4116T	4G1	H07RN-F	

scuba-sc2-sc4-2p60_c_tc

Single-phase version available with pre-assembled float switch (SCUBA CG)

HYDRAULIC PERFORMANCE TABLE AT 60 Hz

PUMP TYPE	RATED POWER		Q = DELIVERY									
			l/min	0	25	30	40	50	60	80	100	115	130
			m^3/h	0	1,5	1,8	2,4	3	3,6	4,8	6	6,9	7,8
	kW	HP	H = TOTAL HEAD METERS COLUMN OF WATER										
SC2076C - SC2076T	0,75	1	45,2	41,3	40,0	37,0	33,5	29,4	19,7			
SC2096C - SC2096T	0,9	1,2	60,0	53,8	52,1	48,2	43,6	38,3	25,1			
SC2116C - SC2116T	1,1	1,5	75,0	67,1	65,0	60,2	54,4	47,7	30,9			
SC4076C - SC4076T	0,75	1	39,3			34,3	32,6	30,7	26,4	21,4	17,2	12,6
SC4096C - SC4096T	0,9	1,2	52,3			45,3	43,0	40,4	34,6	27,9	22,3	16,3
SC4116C - SC4116T	1,1	1,5	64,8			56,0	53,2	50,1	43,2	35,2	28,5	21,2

scuba-sc2-sc4-2p60_c_th

PUMP TYPE SINGLE-PHASE	INPUT POWER* kW	INPUT CURRENT* 220-230 V A	CAPACITOR µF / 450 V
SC2076C	0,95	4,47	25
SC2096C	1,17	5,40	25
SC2116C	1,41	6,43	30
SC4076C	0,97	4,52	25
SC4096C	1,15	5,31	25
SC4116C	1,49	6,80	30

PUMP TYPE THREE-PHASE	INPUT POWER* kW	INPUT CURRENT* 220-230 V A	INPUT CURRENT* 380-400 V A
SC2076T	0,85	2,99	1,73
SC2096T	1,08	3,52	2,03
SC2116T	1,32	4,10	2,37
SC4076T	0,87	3,03	1,75
SC4096T	1,06	3,46	2,00
SC4116T	1,40	4,30	2,48

*Maximum value in specified range

scuba-sc2-sc4-2p60_c_te

LOWARA
a xylem brand

SCUBA SERIES
OPERATING CHARACTERISTICS AT 60 Hz

SC2 - SC4	~ 3450 [rpm]	ISO 9906:2012 - Grade 3B

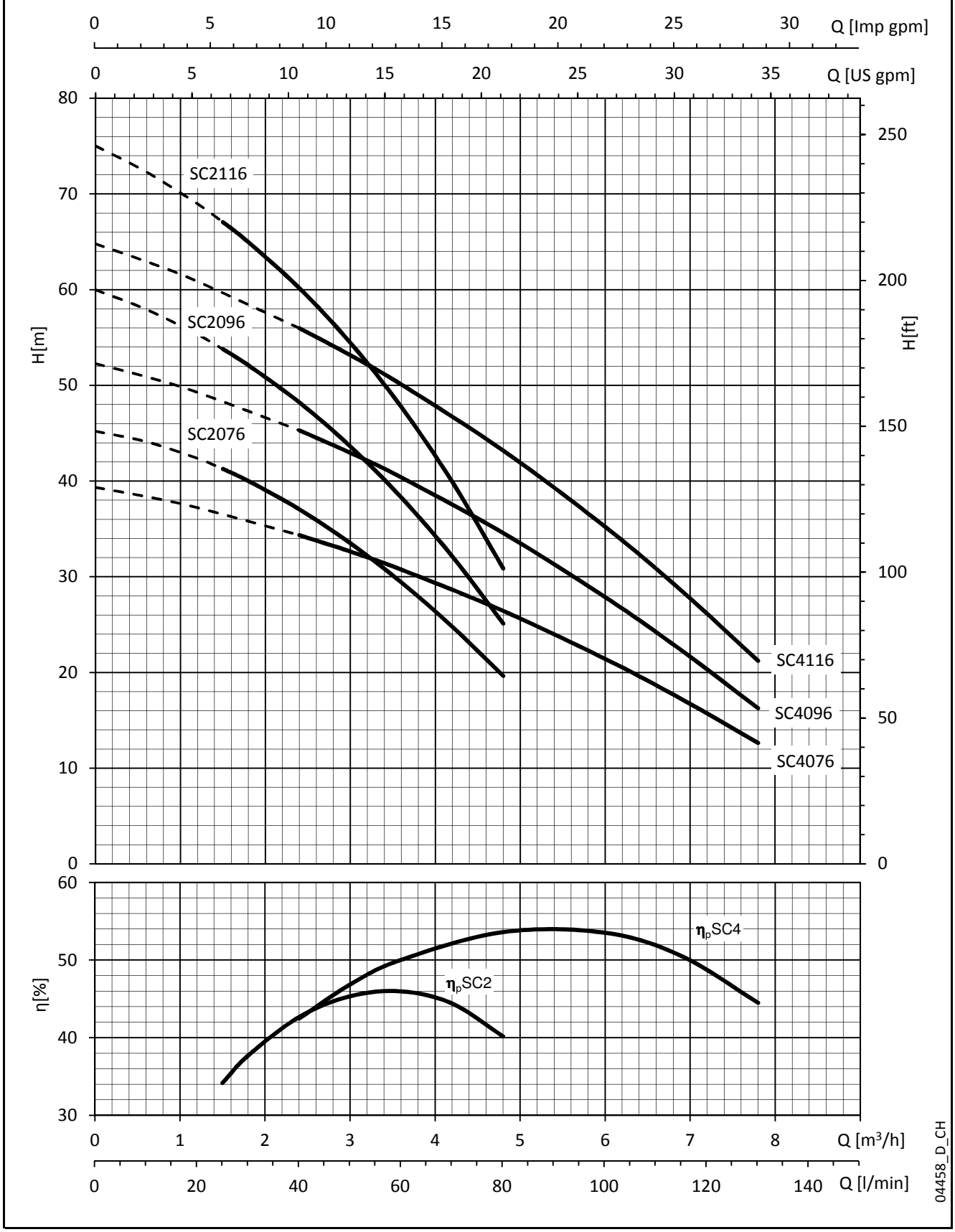

These performances are valid for liquids with density ρ = 1.0 Kg/dm³ and kinematic viscosity ν = 1 mm²/sec.

LOWARA
a xylem brand

SCUBA SERIES
PUMP - PANEL COMBINATION TABLE

PUMP TYPE THREE-PHASE	MOTOR POWER		ABSORBED CURRENT* 380-400 V	CAPACITOR	PANEL TYPE					
	kW	HP	A	µF / 450 V	QTD/...	Q3D/...				
SC2076T	0,75	1	1,73	-	...05	...05				
SC2096T	0,9	1,2	2,03	-	...11	...11				
SC2116T	1,1	1,5	2,37	-	...11	...11				
SC4076T	0,75	1	1,75	-	...05	...05				
SC4096T	0,9	1,2	2,00	-	...11	...11				
SC4116T	1,1	1,5	2,48	-	...11	...11				

*Maximum values within operating range

scuba-sc2-sc4-2p60_b_tp

For different voltages (e.g. 220-240 V) please contact our sales network

LOWARA
a xylem brand

TECHNICAL APPENDIX

SUBMERSIBLE ELECTRIC PUMP INSTALLATION DIAGRAM

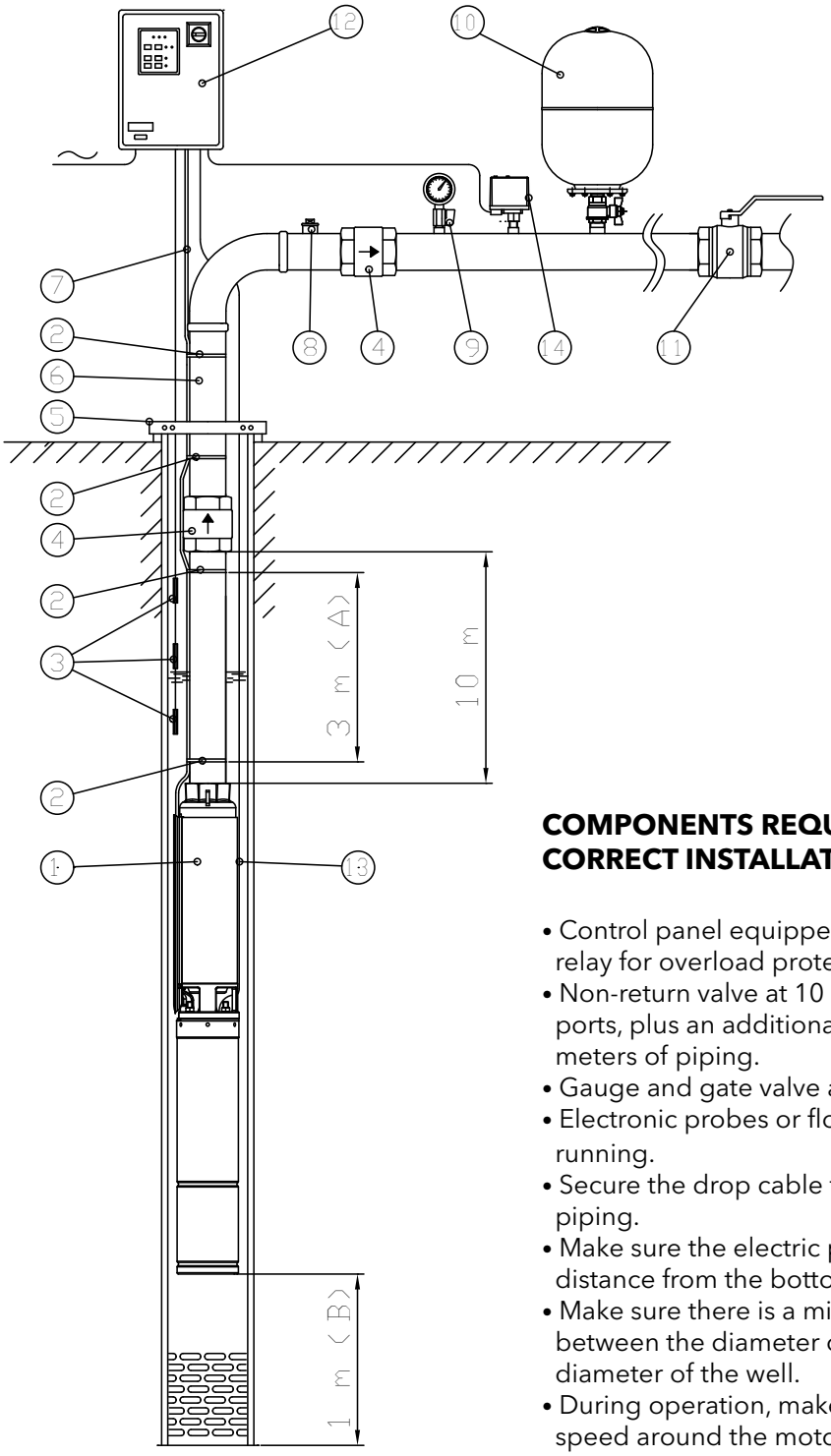

1 - Submersible electric pump.
2 - Cable clamp.
3 - Level sensors for protection against dry running.
4 - Non-return valve.
5 - Support bracket.
6 - Delivery pipe.
7 - Electrical cable for motor power.
8 - Electric pump bleed/ priming cap.
9 - Pressure gauge.
10 - Diaphragm tank.
11 - Gate valve.
12 - Control panel.
13 - PTC/PT100 cable.
14 - Pressure transducer.

A - Distance between the clamps that secure the drop cable to the delivery pipe.
B - Distance from the bottom of the well to the electric pump.

COMPONENTS REQUIRED FOR CORRECT INSTALLATION

- Control panel equipped with a main switch and thermal relay for overload protection.
- Non-return valve at 10 meters' distance from the delivery ports, plus an additional non-return valve every 30÷50 meters of piping.
- Gauge and gate valve at well mouth.
- Electronic probes or floats for protection against dry running.
- Secure the drop cable to the pipe every 2÷3 meters of piping.
- Make sure the electric pump is installed at a safe distance from the bottom of the well.
- Make sure there is a minimum distance of 3 mm between the diameter of the pump and the internal diameter of the well.
- During operation, make sure that the water circulation speed around the motor is at least 8 cm/sec.
- Make sure that the minimum dynamic level of the water in the well is at least 1 m above the pump's delivery port.

A0033_B_SC

EXAMPLE OF INSTALLATION OF A SUBMERSIBLE ELECTRIC PUMP CONTROLLED BY AN INVERTER

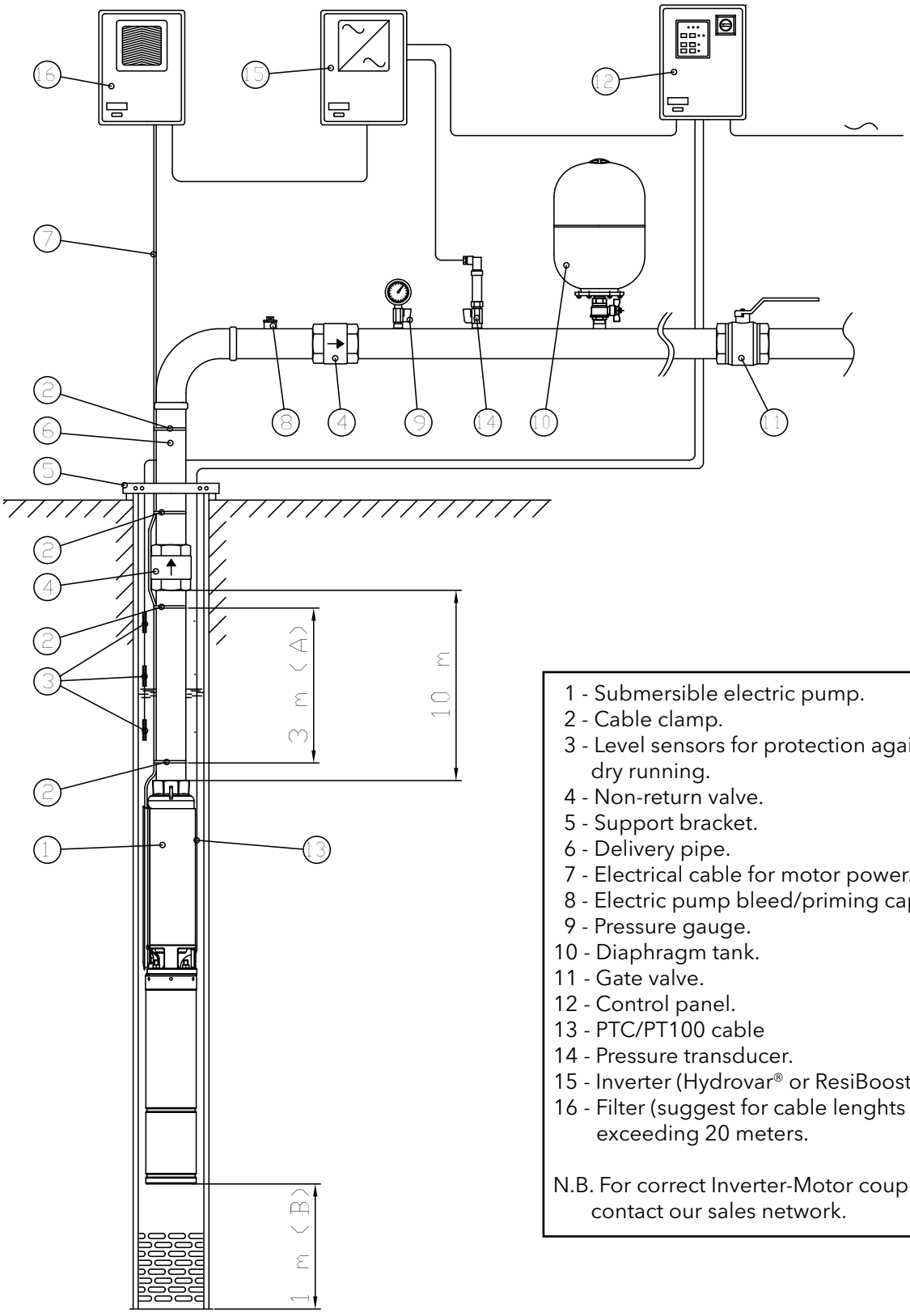

1 - Submersible electric pump.
2 - Cable clamp.
3 - Level sensors for protection against dry running.
4 - Non-return valve.
5 - Support bracket.
6 - Delivery pipe.
7 - Electrical cable for motor power.
8 - Electric pump bleed/priming cap.
9 - Pressure gauge.
10 - Diaphragm tank.
11 - Gate valve.
12 - Control panel.
13 - PTC/PT100 cable
14 - Pressure transducer.
15 - Inverter (Hydrovar® or ResiBoost).
16 - Filter (suggest for cable lenghts exceeding 20 meters.

N.B. For correct Inverter-Motor coupling, contact our sales network.

A0034_B_SC

SCUBA, 60 Hz: SIZING OF ETHYLENE-PROPILENE (EPR) CABLES, DOL (DIRECT ON LINE) STARTING

PUMP TYPE SINGLE-PHASE	RATED POWER Kw	RATED POWER HP	RATED VOLTAGE V	Cos φ	ABSORBED CURRENT A	VOLTAGE DROP %	CABLE GAUGE: 3 x ...mm²								
							mm²	1,5	2,5	4	6	10	16	25	35
							A max	20	28	37	47	65	87	110	137
							Maximum lenght in metres								
SC2076	0,75	1	220	0,956	4,47	4		73	123	198	297				
			230	0,956	4,47										
SC2096	0,9	1,2	220	0,966	5,4			60	100	162	243	418			
			230	0,966	5,4										
SC2116	1,1	1,5	220	0,981	6,43			49	83	134	201	347			
			230	0,981	6,43										
SC4076	0,75	1	220	0,956	4,52			73	121	196	293				
			230	0,956	4,52										
SC4096	0,9	1,2	220	0,965	5,31			61	102	165	247	426			
			230	0,965	5,31										
SC4116	1,1	1,5	220	0,983	6,8			46	78	126	190	328			
			230	0,983	6,8										

Exposed cable laid at a temperature of 30°C, maximum conductor temperature of 80°C

Scubam-cavi-60-en_e_te

PUMP TYPE THREE-PHASE	RATED POWER Kw	RATED POWER HP	RATED VOLTAGE V	Cos φ	ABSORBED CURRENT A	VOLTAGE DROP %	CABLE GAUGE: 4 x ...mm²								
							mm²	1,5	2,5	4	6	10	16	25	35
							A max	20	28	37	47	65	87	110	137
							Maximum lenght in metres								
SC2076T	0,75	1	220	0,744	2,99	4		163	271	434					
			230	0,744	2,99										
			380	0,744	1,73			488							
			400	0,744	1,73										
SC2096T	0,9	1,2	220	0,808	3,52			127	212	341					
			230	0,808	3,52										
			380	0,808	2,03			383							
			400	0,808	2,03										
SC2116T	1,1	1,5	220	0,842	4,1			105	175	281	419				
			230	0,842	4,1										
			380	0,842	2,37			315							
			400	0,842	2,37										
SC4076T	0,75	1	220	0,749	3,03			160	266	426					
			230	0,749	3,03										
			380	0,749	1,75			479							
			400	0,749	1,75										
SC4096T	0,9	1,2	220	0,804	3,46			130	217	348					
			230	0,804	3,46										
			380	0,804	2			391							
			400	0,804	2										
SC4116T	1,1	1,5	220	0,852	4,3			99	165	265	396				
			230	0,852	4,3										
			380	0,852	2,48			298	495						
			400	0,852	2,48										

Exposed cable laid at a temperature of 30°C, maximum conductor temperature of 80°C

Scubat-cavi-60-en_e_te

CALCULATING THE SPEED OF THE FLUID THAT FLOWS AROUND A SUBMERGED MOTOR AND SIZING OF THE COOLING SLEEVE

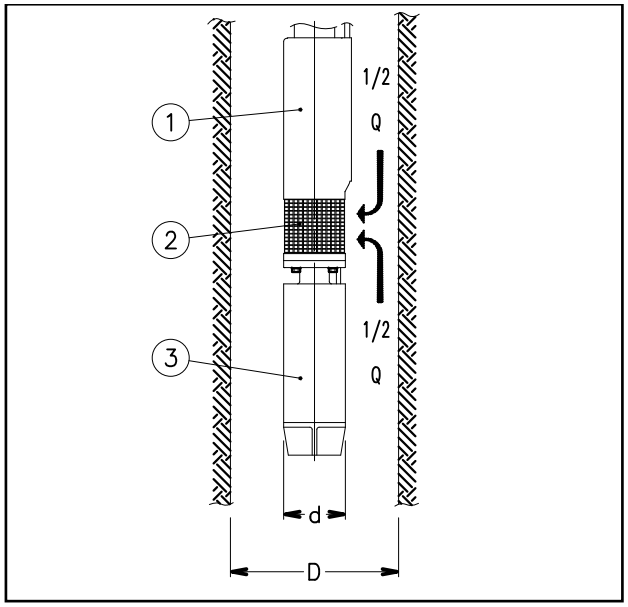

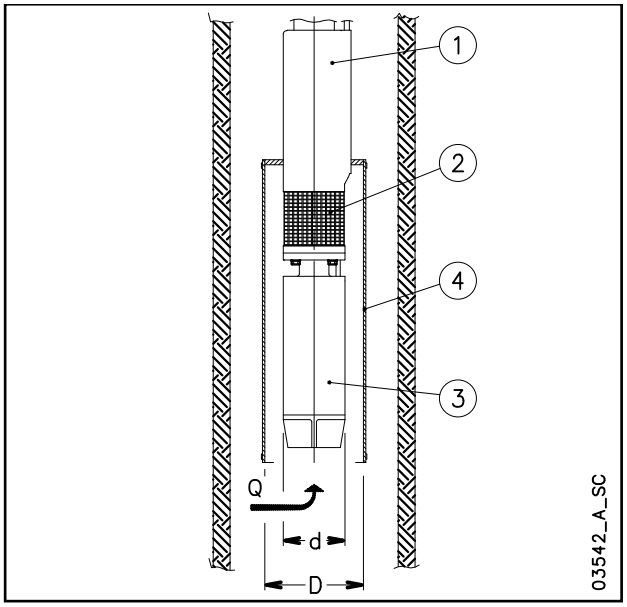

The following formula is used to verify whether the speed of the fluid that flows around the motor of a submersible pump is high enough to guarantee the proper cooling of the motor:

$$v = \frac{\frac{Q}{2}}{\pi \cdot (\frac{D^2}{4} - \frac{d^2}{4})}$$

Where: Q in [m^3/s] is the operating flow rate of the electric pump; only half of this flow is taken into account, because the fluid which is sucked into the area of the filter (2), comes from the motor side (3) as well as from the pump side (1);
D in [m] corresponds to the diameter of the well;
d in [m] corresponds to the diameter of the motor (3);
v in [m/s] is the calculated speed of the fluid that flows around the motor.

Now, compare the speed thus calculated (v) with the minimum speed required for correct cooling of the motor (v_m): if $v \geq v_m$ it means that the motor is properly cooled, if $v < v_m$ will be necessary to mount a cooling sleeve (4).

Example:
An electric pump OZ630/12 (motor diameter d = 0.144 m) operates in an 8" well (well diameter D = 0.203 m) with flow rate
Q = 20 m^3/h = 0.0055 m^3/s.
Speed of fluid v = (0.0055/2) / {π·[(0.203)²/4 – (0.144)²/4]} = 0.17 m/s.
The minimum speed required for proper motor cooling is v_m = 0.20 m/s.
Because $v < v_m$, it will be necessary to mount a cooling sleeve.

The following formula is used to determine the maximum diameter of a cooling sleeve to be mounted on a submersible motor:

$$D = \sqrt{4 \cdot \left(\frac{Q}{v \cdot \pi} + \frac{d^2}{4} \right)}$$

Where: Q in [m^3/s] is the operating flow rate of the electric pump; the entire flow is taken into account because the fluid comes from the motor side (3) only;
D in [m] corresponds to the diameter of the cooling sleeve (4);
d in [m] corresponds to the diameter of the motors(3);
v_m in [m/s] is the minimum speed of the fluid that flows around the motor.

If the electric pump operates at different flow rate, the minimum flow rate must be taken into account for calculating the diameter of the cooling sleeve.

Example:
A motor coupled to the electric pump OZ615/24 (motor diameter d = 0.144 m), which operates with flow rate Q = 15 m^3/h = 0.0042 m^3/s, requires a minimum speed of the fluid of v_m = 0.20 m/s.
Cooling sleeve diameter D = {4·[(0.0042/(0.2·π)+(0.144)²/4] }$^{0.5}$ = 0.217 m.

ASYNCHRONOUS MOTOR STARTING SYSTEMS

Direct

Suitable for low-power motors.
The starting current (Is) is much higher than the rated current (In).
Starting current Is = In x 4 ÷ 8
Starting torque Ts = Tn x 2 ÷ 3

Indirect

• Star/Delta

The starting current (Is) is three times less than the direct starting current.
Starting current Is = In x 1.3 ÷ 2.7
Starting torque Ts = Tn x 0.7 ÷ 1
In the star to delta changeover phase (approx. 70 ms) the motor is not supplied and tends to reduce its rotation speed.
In the case of submersible electric pumps with power above 10 HP, the modest mass of the rotor causes a slowdown at changeover, so that the initial Star supply phase is rendered partially useless.
In such cases we recommend using impedance panels or an autotransformer.

• Impedances

The motor is started with a voltage which is lower than the rated one, and which is obtained by means of impedances.
The Lowara panels use impedances which cut down to 70% the starting voltage.
The switch to the rated voltage takes place without any interruptions of the power supply.

Rated voltage Un = 400 V
Starting voltage Us = Un x 0,7 = 280 V

Starting current

$$Is = In \times 4 \div 8 \times \left(\frac{Us}{Un}\right) = In \times 3 \div 6$$

Starting torque

$$Ts = Tn \times 2 \div 3 \times \left(\frac{Us}{Un}\right)^2 = Tn \times 1 \div 1{,}5$$

Autotransformer

The pump is started with a voltage which is lower than the rated one.
The Lowara panels use an autotransformer with a voltage that is 70% the value of the line voltage.
The switch to the rated voltage occurs without any interruptions of the power supply.
Rated voltage Un = 400 V

Starting current

$$Is = In \times 4 \div 8 \times \left(\frac{Us}{Un}\right) = In \times 3 \div 6$$

Starting torque

$$Ts = Tn \times 2 \div 3 \times \left(\frac{Us}{Un}\right)^2 = Tn \times 1 \div 1{,}5$$

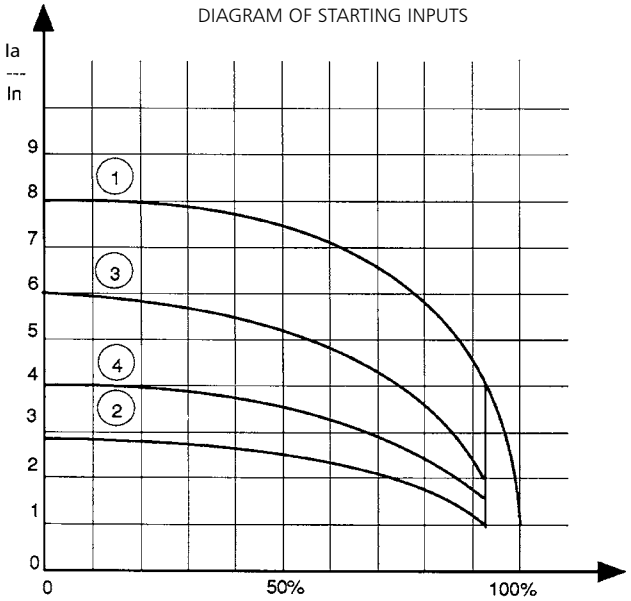

1 = Direct
2 = Star-Delta
3 = Impedances
4 = Autotransformer

WATER REQUIREMENTS IN CIVIL USERS

Determination of the water requirement depends on the type of users and contemporaneity factor. The calculation may be subject to regulations, standards or customs that may vary from country to country. The calculation method shown below is an example based on practical experience, designed to provide a reference value and not a substitute for detailed analytical calculation.

Water requirements in condominiums

The **consumption table** shows the maximum values for each delivery point, depending on the plumbing amenities:

MAXIMUM CONSUMPTION FOR EACH DELIVERY POINT

TYPE	CONSUMPTION (l/min)
Sink	9
Dishwasher	10
Washing machine	12
Shower	12
Bathtub	15
Washbasin	6
Bidet	6
Flush tank WC	6
Controlled flushing system WC	90

The **sum of the water consumption values** of each delivery point determines the maximum theoretical requirement, which must be reduced according to the **contemporaneity coefficient,** because in actual fact the delivery points are never used all together.

$$f = \frac{1}{\sqrt{(0{,}857 \times Nr \times Na)}}$$ Coefficient for apartments with one bathroom and flush tank WC

$$f = \frac{1}{\sqrt{(0{,}857 \times Nr \times Na)}}$$ Coefficient for apartments with one bathroom and controlled flushing system WC

$$f = \frac{1{,}03}{\sqrt{(0{,}545 \times Nr \times Na)}}$$ Coefficient for apartments with two bathrooms and flush tank WC

$$f = \frac{0{,}8}{\sqrt{(0{,}727 \times Nr \times Na)}}$$ Coefficient for apartments with two bathrooms and controlled flushing system WC

f= coefficient; Nr= number of delivery points; Na= number of apartments

The **table of water requirements in civil users** shows the maximum contemporaneity flow-rate values based on the **number of apartments** and the type of WC for apartments with one bathroom and two bathrooms. As regards apartments with one bathroom, 7 drawing points have been taken into consideration, while 11 points have been considered for apartments with two bathrooms. If the number of drawing points or apartments is different, use the formulas to **calculate** the requirement.

TABLE OF WATER REQUIREMENTS IN CIVIL USERS

NUMBER OF APARTMENTS	WITH FLUSH TANK WC		WITH CONTROLLED FLUSHING SYSTEM WC	
	1	2	1	2
	FLOW RATE (l/min)			
1	32	40	60	79
2	45	56	85	111
3	55	68	105	136
4	63	79	121	157
5	71	88	135	176
6	78	97	148	193
7	84	105	160	208
8	90	112	171	223
9	95	119	181	236
10	100	125	191	249
11	105	131	200	261
12	110	137	209	273
13	114	143	218	284
14	119	148	226	295
15	123	153	234	305
16	127	158	242	315
17	131	163	249	325
18	134	168	256	334
19	138	172	263	343
20	142	177	270	352
21	145	181	277	361
22	149	185	283	369
23	152	190	290	378
24	155	194	296	386
25	158	198	302	394
26	162	202	308	401
27	165	205	314	409
28	168	209	320	417
29	171	213	325	424
30	174	217	331	431
35	187	234	357	466
40	200	250	382	498
45	213	265	405	528
50	224	280	427	557
55	235	293	448	584
60	245	306	468	610
65	255	319	487	635
70	265	331	506	659
75	274	342	523	682
80	283	354	540	704
85	292	364	557	726
90	301	375	573	747
95	309	385	589	767
100	317	395	604	787
120	347	433	662	863
140	375	468	715	932
160	401	500	764	996
180	425	530	811	1056
200	448	559	854	1114

For seaside resorts, a flow rate increased by at least 20% must be considered.

G-at-fi_a_th

WATER REQUIREMENTS FOR COMMUNITY BUILDINGS

The requirements of buildings intended for specific uses, such as **offices, residential units, hotels, department stores, nursing homes** and so on, are different from those of condominiums, and both their global daily water consumption and the maximum contemporaneity flow rate are usually greater.
The **diagram of water requirements for community buildings** shows the maximum contemporaneity flow rate of some types of communities, for guidance.
These requirements must be determined case by case with the utmost accuracy, using analytical calculation methods,according to particular needs and local provisions.

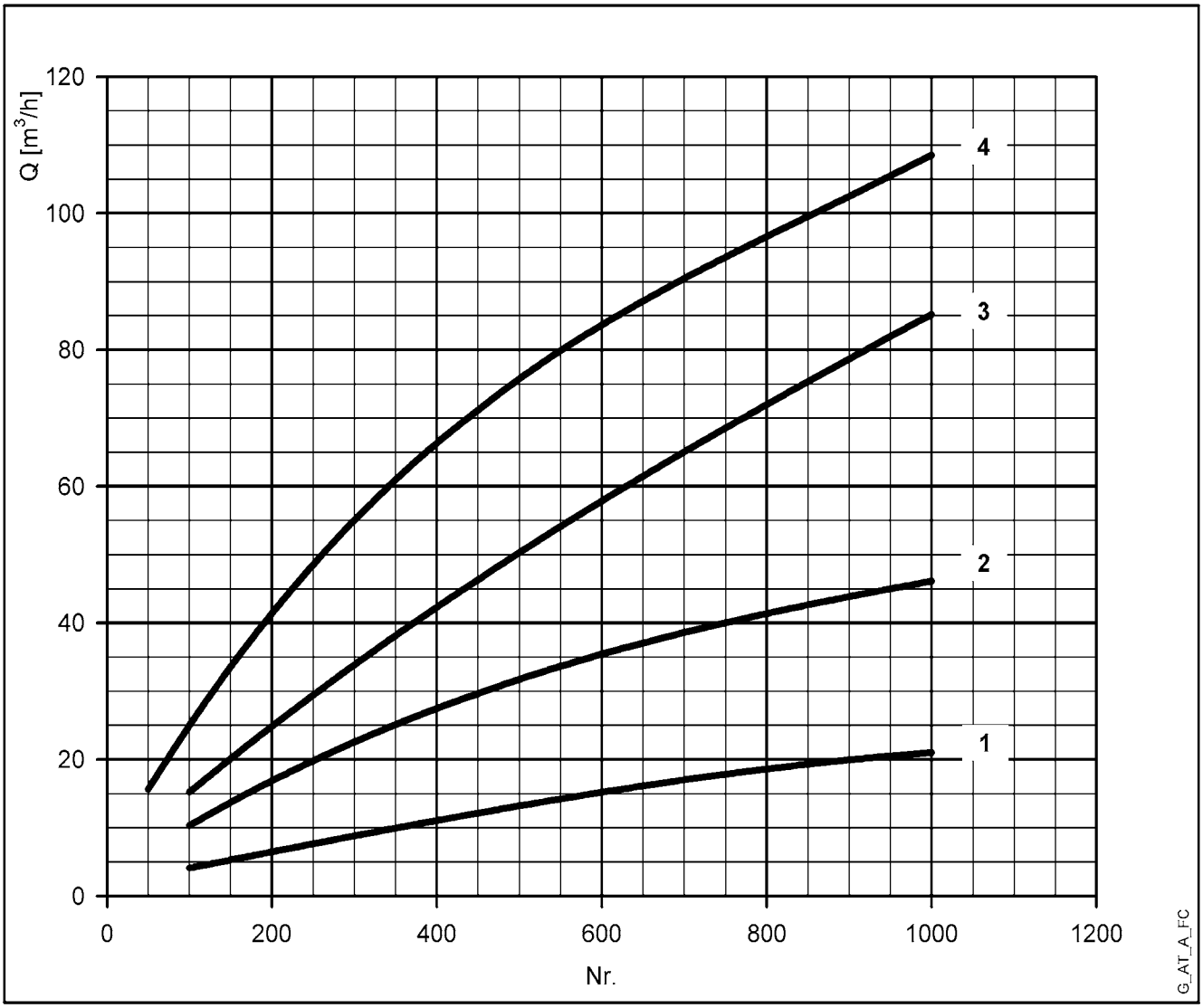

For seaside resorts, the flow rate must be increased by at least 20%.
1= Offices (N. of people)
2= Department stores (N. of people)
3= Nursing homes (N. of beds)
4= Hotels, residences (N. of beds)

NPSH

The minimum operating values that can be reached at the pump suction end are limited by the onset of cavitation.

Cavitation is the formation of vapour-filled cavities within liquids where the pressure is locally reduced to a critical value, or where the local pressure is equal to, or just below the vapour pressure of the liquid.

The vapour-filled cavities flow with the current and when they reach a higher pressure area the vapour contained in the cavities condenses. The cavities collide, generating pressure waves that are transmitted to the walls. These, being subjected to stress cycles, gradually become deformed and yield due to fatigue. This phenomenon, characterized by a metallic noise produced by the hammering on the pipe walls, is called incipient cavitation.

The damage caused by cavitation may be magnified by electrochemical corrosion and a local rise in temperature due to the plastic deformation of the walls. The materials that offer the highest resistance to heat and corrosion are alloy steels, especially austenitic steel. The conditions that trigger cavitation may be assessed by calculating the total net suction head, referred to in technical literature with the acronym NPSH (Net Positive Suction Head).

The NPSH represents the total energy (expressed in m.) of the liquid measured at suction under conditions of incipient cavitation, excluding the vapour pressure (expressed in m.) that the liquid has at the pump inlet.

To find the static height hz at which to install the machine under safe conditions, the following formula must be verified:

hp + hz $\geq$ **(NPSHr + 0.5) + hf + hpv** ①

where:

hp is the absolute pressure applied to the free liquid surface in the suction tank, expressed in m. of liquid; hp is the quotient between the barometric pressure and the specific weight of the liquid.

hz is the suction lift between the pump axis and the free liquid surface in the suction tank, expressed in m.; hz is negative when the liquid level is lower than the pump axis.

hf is the flow resistance in the suction line and its accessories, such as: fittings, foot valve, gate valve, elbows, etc.

hpv is the vapour pressure of the liquid at the operating temperature, expressed in m. of liquid. hpv is the quotient between the Pv vapour pressure and the liquid's specific weight.

0,5 is the safety factor.

The maximum possible suction head for installation depends on the value of the atmospheric pressure (i.e. the elevation above sea level at which the pump is installed) and the temperature of the liquid.

To help the user, with reference to water temperature (4° C) and to the elevation above sea level, the following tables show the drop in hydraulic pressure head in relation to the elevation above sea level, and the suction loss in relation to temperature.

Water temperature (°C)	20	40	60	80	90	110	120
Suction loss (m)	0,2	0,7	2,0	5,0	7,4	15,4	21,5

Elevation above sea level (m)	500	1000	1500	2000	2500	3000
Suction loss (m)	0,55	1,1	1,65	2,2	2,75	3,3

Friction loss is shown in the tables at pages 117-118 of this catalogue. To reduce it to a minimum, especially in cases of high suction head (over 4-5 m.) or within the operating limits with high flow rates, we recommend using a suction line having a larger diameter than that of the pump's suction port. It is always a good idea to position the pump as close as possible to the liquid to be pumped.

Make the following calculation:

Liquid: water at ~15°C γ = 1 kg/dm^3
Flow rate required: 30 m^3/h
Head for required delivery: 43 m.
Suction lift: 3,5 m.
The selection is an FHE 40-200/75 pump whose NPSH required value is, at 30 m^3/h, di 2,5 m.

For water at 15 °C

hp = Pa / γ = 10,33m, hpv = Pv / γ = 0,174m (0,01701 bar)

The Hf flow resistance in the suction line with foot valves is ~ 1,2 m.
By substituting the parameters in formula ① with the numeric values above, we have:

10,33 + (-3,5) $\geq$ (2,5 + 0,5) + 1,2 + 0,17

from which we have: 6,8 > 4,4

The relation is therefore verified.

TECHNICAL APPENDIX VAPOUR PRESSURE
VAPOUR PRESSURE ps AND ρ DENSITY OF WATER TABLE

t	T	ps	ρ
°C	K	bar	kg/dm^3
0	273,15	0,00611	0,9998
1	274,15	0,00657	0,9999
2	275,15	0,00706	0,9999
3	276,15	0,00758	0,9999
4	277,15	0,00813	1,0000
5	278,15	0,00872	1,0000
6	279,15	0,00935	1,0000
7	280,15	0,01001	0,9999
8	281,15	0,01072	0,9999
9	282,15	0,01147	0,9998
10	283,15	0,01227	0,9997
11	284,15	0,01312	0,9997
12	285,15	0,01401	0,9996
13	286,15	0,01497	0,9994
14	287,15	0,01597	0,9993
15	288,15	0,01704	0,9992
16	289,15	0,01817	0,9990
17	290,15	0,01936	0,9988
18	291,15	0,02062	0,9987
19	292,15	0,02196	0,9985
20	293,15	0,02337	0,9983
21	294,15	0,24850	0,9981
22	295,15	0,02642	0,9978
23	296,15	0,02808	0,9976
24	297,15	0,02982	0,9974
25	298,15	0,03166	0,9971
26	299,15	0,03360	0,9968
27	300,15	0,03564	0,9966
28	301,15	0,03778	0,9963
29	302,15	0,04004	0,9960
30	303,15	0,04241	0,9957
31	304,15	0,04491	0,9954
32	305,15	0,04753	0,9951
33	306,15	0,05029	0,9947
34	307,15	0,05318	0,9944
35	308,15	0,05622	0,9940
36	309,15	0,05940	0,9937
37	310,15	0,06274	0,9933
38	311,15	0,06624	0,9930
39	312,15	0,06991	0,9927
40	313,15	0,07375	0,9923
41	314,15	0,07777	0,9919
42	315,15	0,08198	0,9915
43	316,15	0,09639	0,9911
44	317,15	0,09100	0,9907
45	318,15	0,09582	0,9902
46	319,15	0,10086	0,9898
47	320,15	0,10612	0,9894
48	321,15	0,11162	0,9889
49	322,15	0,11736	0,9884
50	323,15	0,12335	0,9880
51	324,15	0,12961	0,9876
52	325,15	0,13613	0,9871
53	326,15	0,14293	0,9862
54	327,15	0,15002	0,9862

t	T	ps	ρ
°C	K	bar	kg/dm^3
55	328,15	0,15741	0,9857
56	329,15	0,16511	0,9852
57	330,15	0,17313	0,9846
58	331,15	0,18147	0,9842
59	332,15	0,19016	0,9837
60	333,15	0,1992	0,9832
61	334,15	0,2086	0,9826
62	335,15	0,2184	0,9821
63	336,15	0,2286	0,9816
64	337,15	0,2391	0,9811
65	338,15	0,2501	0,9805
66	339,15	0,2615	0,9799
67	340,15	0,2733	0,9793
68	341,15	0,2856	0,9788
69	342,15	0,2984	0,9782
70	343,15	0,3116	0,9777
71	344,15	0,3253	0,9770
72	345,15	0,3396	0,9765
73	346,15	0,3543	0,9760
74	347,15	0,3696	0,9753
75	348,15	0,3855	0,9748
76	349,15	0,4019	0,9741
77	350,15	0,4189	0,9735
78	351,15	0,4365	0,9729
79	352,15	0,4547	0,9723
80	353,15	0,4736	0,9716
81	354,15	0,4931	0,9710
82	355,15	0,5133	0,9704
83	356,15	0,5342	0,9697
84	357,15	0,5557	0,9691
85	358,15	0,5780	0,9684
86	359,15	0,6011	0,9678
87	360,15	0,6249	0,9671
88	361,15	0,6495	0,9665
89	362,15	0,6749	0,9658
90	363,15	0,7011	0,9652
91	364,15	0,7281	0,9644
92	365,15	0,7561	0,9638
93	366,15	0,7849	0,9630
94	367,15	0,8146	0,9624
95	368,15	0,8453	0,9616
96	369,15	0,8769	0,9610
97	370,15	0,9094	0,9602
98	371,15	0,9430	0,9596
99	372,15	0,9776	0,9586
100	373,15	1,0133	0,9581
102	375,15	1,0878	0,9567
104	377,15	1,1668	0,9552
106	379,15	1,2504	0,9537
108	381,15	1,3390	0,9522
110	383,15	1,4327	0,9507
112	385,15	1,5316	0,9491
114	387,15	1,6362	0,9476
116	389,15	1,7465	0,9460
118	391,15	1,8628	0,9445

t	T	ps	ρ
°C	K	bar	kg/dm^3
120	393,15	1,9854	0,9429
122	395,15	2,1145	0,9412
124	397,15	2,2504	0,9396
126	399,15	2,3933	0,9379
128	401,15	2,5435	0,9362
130	403,15	2,7013	0,9346
132	405,15	2,867	0,9328
134	407,15	3,041	0,9311
136	409,15	3,223	0,9294
138	411,15	3,414	0,9276
140	413,15	3,614	0,9258
145	418,15	4,155	0,9214
155	428,15	5,433	0,9121
160	433,15	6,181	0,9073
165	438,15	7,008	0,9024
170	433,15	7,920	0,8973
175	448,15	8,924	0,8921
180	453,15	10,027	0,8869
185	458,15	11,233	0,8815
190	463,15	12,551	0,8760
195	468,15	13,987	0,8704
200	473,15	15,550	0,8647
205	478,15	17,243	0,8588
210	483,15	19,077	0,8528
215	488,15	21,060	0,8467
220	493,15	23,198	0,8403
225	498,15	25,501	0,8339
230	503,15	27,976	0,8273
235	508,15	30,632	0,8205
240	513,15	33,478	0,8136
245	518,15	36,523	0,8065
250	523,15	39,776	0,7992
255	528,15	43,246	0,7916
260	533,15	46,943	0,7839
265	538,15	50,877	0,7759
270	543,15	55,058	0,7678
275	548,15	59,496	0,7593
280	553,15	64,202	0,7505
285	558,15	69,186	0,7415
290	563,15	74,461	0,7321
295	568,15	80,037	0,7223
300	573,15	85,927	0,7122
305	578,15	92,144	0,7017
310	583,15	98,70	0,6906
315	588,15	105,61	0,6791
320	593,15	112,89	0,6669
325	598,15	120,56	0,6541
330	603,15	128,63	0,6404
340	613,15	146,05	0,6102
350	623,15	165,35	0,5743
360	633,15	186,75	0,5275
370	643,15	210,54	0,4518
374,15	647,30	221,20	0,3154

G-at_npsh_a_sc

LOWARA
a xylem brand

TABLE OF FLOW RESISTANCE IN 100 m OF STRAIGHT CAST IRON PIPELINE (HAZEN-WILLIAMS FORMULA C=100)

FLOW RATE			NOMINAL DIAMETER in mm and INCHES																
m^3/h	l/min		15	20	25	32	40	50	65	80	100	125	150	175	200	250	300	350	400
			1/2"	3/4"	1"	1 1/4"	1 1/2"	2	2 1/2"	3"	4"	5"	6"	7"	8"	10"	12"	14"	16"
0,6	10	v	0,94	0,53	0,34	0,21	0,13												
		hr	16	3,94	1,33	0,40	0,13												
0,9	15	v	1,42	0,80	0,51	0,31	0,20												
		hr	33,9	8,35	2,82	0,85	0,29												
1,2	20	v	1,89	1,06	0,68	0,41	0,27	0,17											
		hr	57,7	14,21	4,79	1,44	0,49	0,16											
1,5	25	v	2,36	1,33	0,85	0,52	0,33	0,21											
		hr	87,2	21,5	7,24	2,18	0,73	0,25											
1,8	30	v	2,83	1,59	1,02	0,62	0,40	0,25											
		hr	122	30,1	10,1	3,05	1,03	0,35											
2,1	35	v	3,30	1,86	1,19	0,73	0,46	0,30											
		hr	162	40,0	13,5	4,06	1,37	0,46											
2,4	40	v		2,12	1,36	0,83	0,53	0,34	0,20										
		hr		51,2	17,3	5,19	1,75	0,59	0,16										
3	50	v		2,65	1,70	1,04	0,66	0,42	0,25										
		hr		77,4	26,1	7,85	2,65	0,89	0,25										
3,6	60	v		3,18	2,04	1,24	0,80	0,51	0,30										
		hr		108	36,6	11,0	3,71	1,25	0,35										
4,2	70	v		3,72	2,38	1,45	0,93	0,59	0,35										
		hr		144	48,7	14,6	4,93	1,66	0,46										
4,8	80	v		4,25	2,72	1,66	1,06	0,68	0,40										
		hr		185	62,3	18,7	6,32	2,13	0,59										
5,4	90	v			3,06	1,87	1,19	0,76	0,45	0,30									
		hr			77,5	23,3	7,85	2,65	0,74	0,27									
6	100	v			3,40	2,07	1,33	0,85	0,50	0,33									
		hr			94,1	28,3	9,54	3,22	0,90	0,33									
7,5	125	v			4,25	2,59	1,66	1,06	0,63	0,41									
		hr			142	42,8	14,4	4,86	1,36	0,49									
9	150	v				3,11	1,99	1,27	0,75	0,50	0,32								
		hr				59,9	20,2	6,82	1,90	0,69	0,23								
10,5	175	v				3,63	2,32	1,49	0,88	0,58	0,37								
		hr				79,7	26,9	9,07	2,53	0,92	0,31								
12	200	v				4,15	2,65	1,70	1,01	0,66	0,42								
		hr				102	34,4	11,6	3,23	1,18	0,40								
15	250	v				5,18	3,32	2,12	1,26	0,83	0,53	0,34							
		hr				154	52,0	17,5	4,89	1,78	0,60	0,20							
18	300	v					3,98	2,55	1,51	1,00	0,64	0,41							
		hr					72,8	24,6	6,85	2,49	0,84	0,28							
24	400	v					5,31	3,40	2,01	1,33	0,85	0,54	0,38						
		hr					124	41,8	11,66	4,24	1,43	0,48	0,20						
30	500	v					6,63	4,25	2,51	1,66	1,06	0,68	0,47						
		hr					187	63,2	17,6	6,41	2,16	0,73	0,30						
36	600	v						5,10	3,02	1,99	1,27	0,82	0,57	0,42					
		hr						88,6	24,7	8,98	3,03	1,02	0,42	0,20					
42	700	v						5,94	3,52	2,32	1,49	0,95	0,66	0,49					
		hr						118	32,8	11,9	4,03	1,36	0,56	0,26					
48	800	v						6,79	4,02	2,65	1,70	1,09	0,75	0,55					
		hr						151	42,0	15,3	5,16	1,74	0,72	0,34					
54	900	v						7,64	4,52	2,99	1,91	1,22	0,85	0,62					
		hr						188	52,3	19,0	6,41	2,16	0,89	0,42					
60	1000	v							5,03	3,32	2,12	1,36	0,94	0,69	0,53				
		hr							63,5	23,1	7,79	2,63	1,08	0,51	0,27				
75	1250	v							6,28	4,15	2,65	1,70	1,18	0,87	0,66				
		hr							96,0	34,9	11,8	3,97	1,63	0,77	0,40				
90	1500	v							7,54	4,98	3,18	2,04	1,42	1,04	0,80				
		hr							134	48,9	16,5	5,57	2,29	1,08	0,56				
105	1750	v							8,79	5,81	3,72	2,38	1,65	1,21	0,93				
		hr							179	65,1	21,9	7,40	3,05	1,44	0,75				
120	2000	v								6,63	4,25	2,72	1,89	1,39	1,06	0,68			
		hr								83,3	28,1	9,48	3,90	1,84	0,96	0,32			
150	2500	v								8,29	5,31	3,40	2,36	1,73	1,33	0,85			
		hr								126	42,5	14,3	5,89	2,78	1,45	0,49			
180	3000	v									6,37	4,08	2,83	2,08	1,59	1,02	0,71		
		hr									59,5	20,1	8,26	3,90	2,03	0,69	0,28		
210	3500	v									7,43	4,76	3,30	2,43	1,86	1,19	0,83		
		hr									79,1	26,7	11,0	5,18	2,71	0,91	0,38		
240	4000	v									8,49	5,44	3,77	2,77	2,12	1,36	0,94		
		hr									101	34,2	14,1	6,64	3,46	1,17	0,48		
300	5000	v										6,79	4,72	3,47	2,65	1,70	1,18		
		hr										51,6	21,2	10,0	5,23	1,77	0,73		
360	6000	v										8,15	5,66	4,16	3,18	2,04	1,42		
		hr										72,3	29,8	14,1	7,33	2,47	1,02		
420	7000	v											6,61	4,85	3,72	2,38	1,65	1,21	
		hr											39,6	18,7	9,75	3,29	1,35	0,64	
480	8000	v											7,55	5,55	4,25	2,72	1,89	1,39	
		hr											50,7	23,9	12,49	4,21	1,73	0,82	
540	9000	v											8,49	6,24	4,78	3,06	2,12	1,56	1,19
		hr											63,0	29,8	15,5	5,24	2,16	1,02	0,53
600	10000	v												6,93	5,31	3,40	2,36	1,73	1,33
		hr												36,2	18,9	6,36	2,62	1,24	0,65

The hr values must be multiplied by:
0.71 for galvanized or painted steel pipes
0.54 for stainless steel or copper pipes
0.47 for PVC or PE pipes

G-at-pct_a_th

hr = flow resistance for 100m of straight pipeline (m)
V = water speed (m/s)

FLOW RESISTANCE

TABLE OF FLOW RESISTANCE IN BENDS, VALVES AND GATES

The flow resistance is calculated using the equivalent pipeline length method according to the table below:

ACCESSORY TYPE	DN											
	25	32	40	50	65	80	100	125	150	200	250	300
	Equivalent pipeline length (m)											
45° bend	0,2	0,2	0,4	0,4	0,6	0,6	0,9	1,1	1,5	1,9	2,4	2,8
90° bend	0,4	0,6	0,9	1,1	1,3	1,5	2,1	2,6	3,0	3,9	4,7	5,8
90° smooth bend	0,4	0,4	0,4	0,6	0,9	1,1	1,3	1,7	1,9	2,8	3,4	3,9
Union tee or cross	1,1	1,3	1,7	2,1	2,6	3,2	4,3	5,3	6,4	7,5	10,7	12,8
Gate	-	-	-	0,2	0,2	0,2	0,4	0,4	0,6	0,9	1,1	1,3
Non return valve	1,1	1,5	1,9	2,4	3,0	3,4	4,7	5,9	7,4	9,6	11,8	13,9

G-a-pcv_a_th

The table is valid for the Hazen Williams coefficient C = 100 (cast iron pipework). For steel pipework, multiply the values by 1.41. For stainless steel, copper and coated cast iron pipework, multiply the values by 1.85.
When the **equivalent pipeline length** has been determined, the flow resistance is obtained from the table of flow resistance.
The values given are guideline values which are bound to vary slightly according to the model, especially for gate valves and non-return valves, for which it is a good idea to check the values supplied by the manufacturers.

VOLUMETRIC CAPACITY

Litres per minute l/min	Cubic metres per hour m^3/h	Cubic feet per hour ft^3/h	Cubic feet per minute ft^3/min	Imperial gallon per minute Imp. gal/min	U.S. gallon per minute US gal/min
1,0000	0,0600	2,1189	0,0353	0,2200	0,2642
16,6667	**1,0000**	35,3147	0,5886	3,6662	4,4029
0,4719	0,0283	**1,0000**	0,0167	0,1038	0,1247
28,3168	1,6990	60,0000	**1,0000**	6,2288	7,4805
4,5461	0,2728	9,6326	0,1605	**1,0000**	1,2009
3,7854	0,2271	8,0208	0,1337	0,8327	**1,0000**

PRESSURE AND HEAD

Newton per square metre N/m^2	kilo Pascal kPa	bar bar	Pound force per square inch psi	Metre of water m H_2O	Millimetre of mercury mm Hg
1,0000	0,0010	1×10^{-5}	$1,45 \times 10^{-4}$	$1,02 \times 10^{-4}$	0,0075
1 000,0000	**1,0000**	0,0100	0,1450	0,1020	7,5006
1×10^5	100,0000	**1,0000**	14,5038	10,1972	750,0638
6 894,7570	6,8948	0,0689	**1,0000**	0,7031	51,7151
9 806,6500	9,8067	0,0981	1,4223	**1,0000**	73,5561
133,3220	0,1333	0,0013	0,0193	0,0136	**1,0000**

LENGTH

Millimetre mm	Centimetre cm	Metre m	Inch in	Foot ft	Yard yd
1,0000	0,1000	0,0010	0,0394	0,0033	0,0011
10,0000	**1,0000**	0,0100	0,3937	0,0328	0,0109
1 000,0000	100,0000	**1,0000**	39,3701	3,2808	1,0936
25,4000	2,5400	0,0254	**1,0000**	0,0833	0,0278
304,8000	30,4800	0,3048	12,0000	**1,0000**	0,3333
914,4000	91,4400	0,9144	36,0000	3,0000	**1,0000**

VOLUME

Cubic metre m^3	Litre L	Millilitre ml	Imperial gallon imp. gal.	U.S. gallon US gal.	Cubic foot ft^3
1,0000	1 000,0000	1×10^6	219,9694	264,1720	35,3147
0,0010	**1,0000**	1 000,0000	0,2200	0,2642	0,0353
1×10^{-6}	0,0010	**1,0000**	$2,2 \times 10^{-4}$	$2,642 \times 10^{-4}$	$3,53 \times 10^{-5}$
0,0045	4,5461	4 546,0870	**1,0000**	1,2009	0,1605
0,0038	3,7854	3 785,4120	0,8327	**1,0000**	0,1337
0,0283	28,3168	28 316,8466	6,2288	7,4805	**1,0000**

TEMPERATURE

Water	Kelvin K	Celsius °C	Fahrenheit °F	$°F = °C \times \frac{9}{5} + 32$ $°C = (°F - 32) \times \frac{5}{9}$
icing	273,1500	0,0000	32,0000	
boiling	373,1500	100,0000	212,0000	

G-at_pp-en_b_sc

FURTHER PRODUCT SELECTION AND DOCUMENTATION

Xylect™

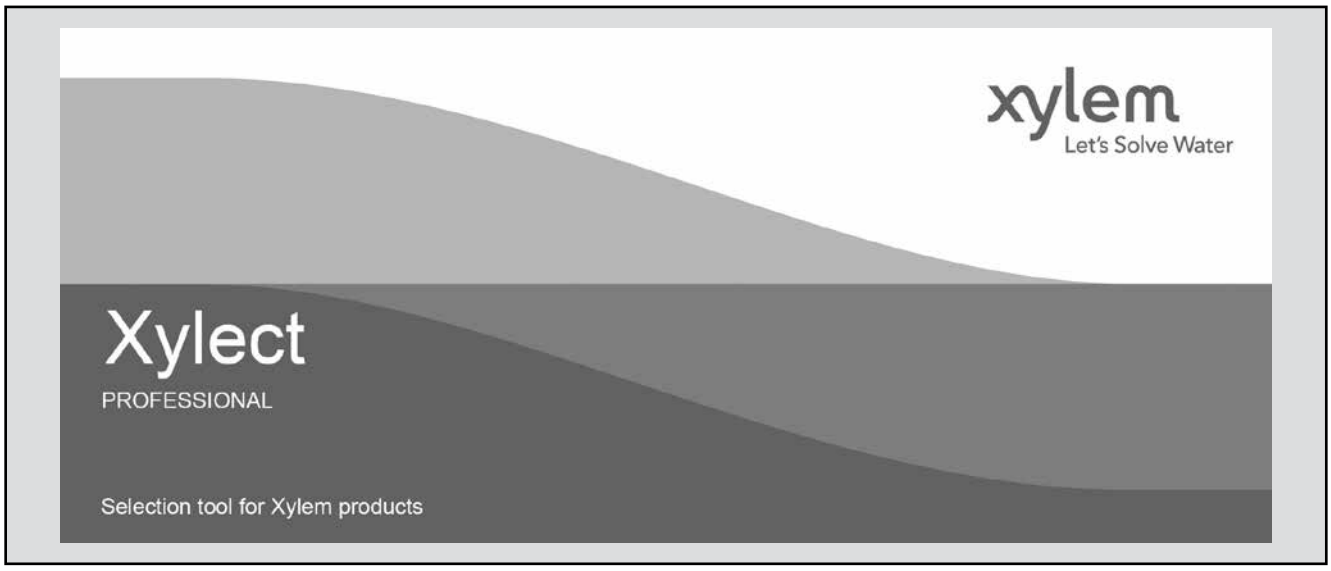

Xylect is pump solution selection software with an extensive online database of product information across the entire Lowara, and Vogel range of pumps and related products, with multiple search options and helpful project management facilities. The system holds up-to-date product information on thousands of products and accessories.

The possibility to search by applications and the detailed information output given makes it easy to make the optimal selection without having detailed knowledge about the Lowara and Vogel products.

The search can be made by:

- Application
- Product type
- Duty point

Xylect gives a detailed output:

- List with search results
- Performance curves (flow, head, power, efficiency, NPSH)
- Motor data
- Dimensional drawings
- Options
- Data sheet printouts
- Document downloads incl dxf files

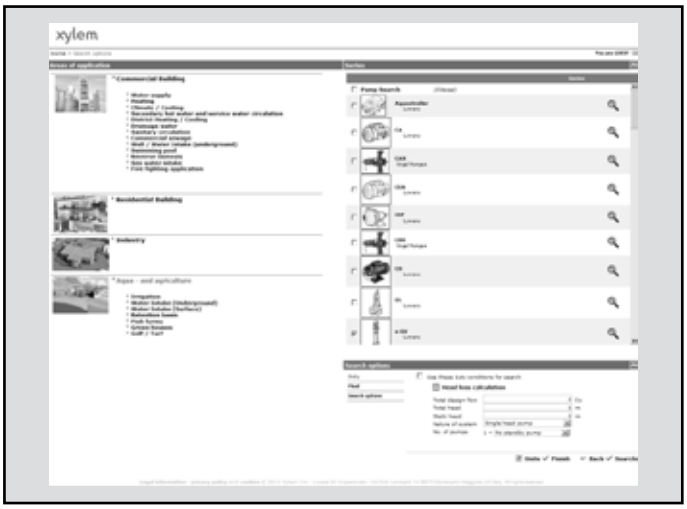

The search by application guides users not familiar with the product range to the right choice.

FURTHER PRODUCT SELECTION AND DOCUMENTATION

Xylect™

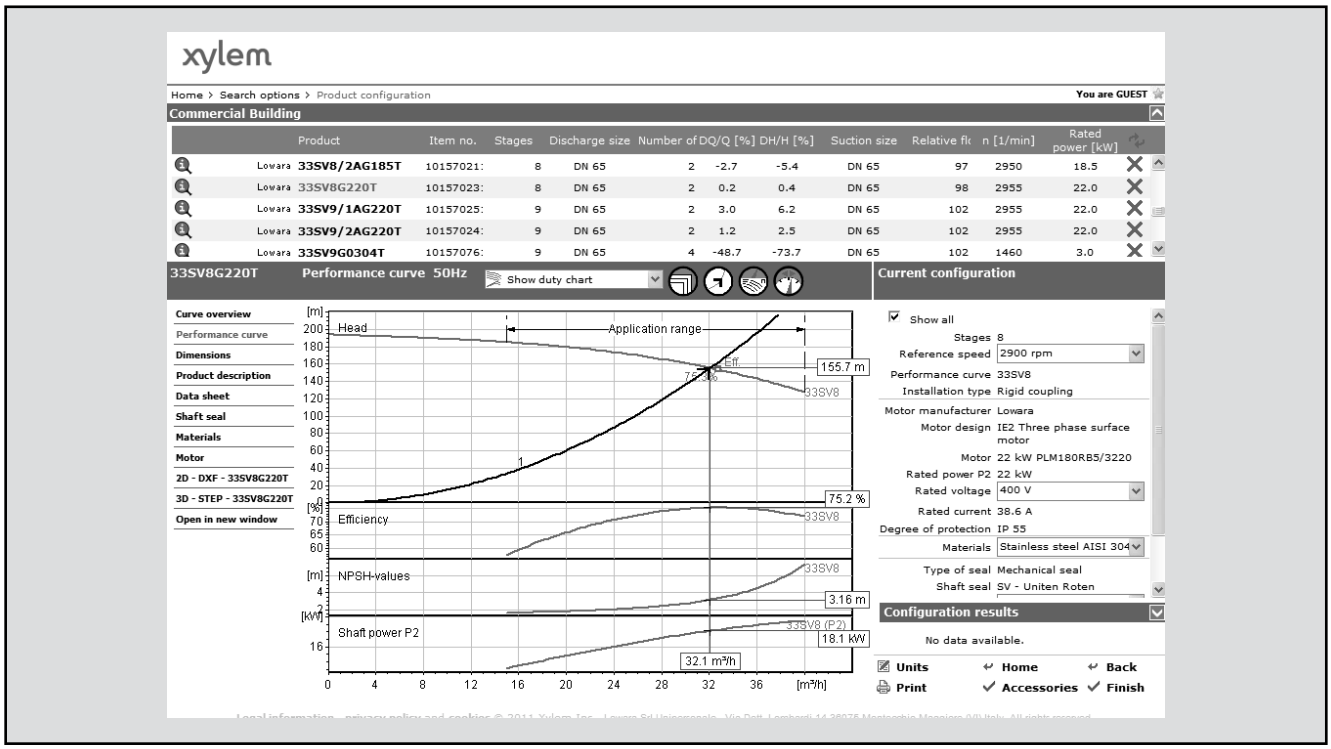

The detailed output makes it easy to select the optimal pump from the given alternatives.

The best way to work with Xylect is to create a personal account. This makes it possible to:

- Set own standard units
- Create and save projects
- Share projects with other Xylect users

Every registered user has a proper space, where all projects are saved.

For more information about Xylect please contact our sales network or visit www.xylect.com.

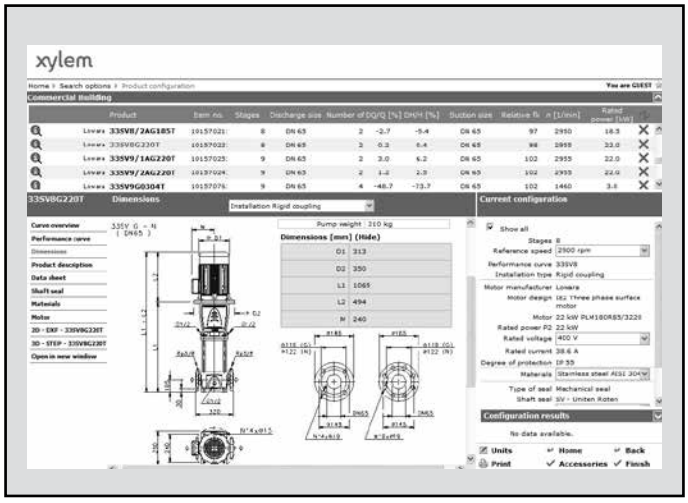

Dimensional drawings appear on the screen and can be downloaded in dxf format.

Xylem |'zīləm|

1) The tissue in plants that brings water upward from the roots;
2) a leading global water technology company.

We're a global team unified in a common purpose: creating innovative solutions to meet our world's water needs. Developing new technologies that will improve the way water is used, conserved, and re-used in the future is central to our work. We move, treat, analyze, and return water to the environment, and we help people use water efficiently, in their homes, buildings, factories and farms. In more than 150 countries, we have strong, long-standing relationships with customers who know us for our powerful combination of leading product brands and applications expertise, backed by a legacy of innovation.

For more information on how Xylem can help you, go to xyleminc.com.

LOWARA

xylem
Let's Solve Water

Legal head office
Xylem Water Solutions Italia Srl

Via Gioacchino Rossini 1/A
20020 – Lainate (MI) - Italy
Tel. (+39) 02 90358.1
Fax (+39) 02 9019990
www.xylemwatersolutions.com

For information and technical support
Xylem Service Italia Srl

Via Dottor Vittorio Lombardi 14
36075 - Montecchio Maggiore (VI) - Italy
Tel. (+39) 0444 707111
Fax (+39) 0444 491043
www.lowara.com

Xylem Water Solutions Italia Srl reserves the right to make modification without prior notice.
Lowara, Xylem are trademarks of Xylem Inc. or one of its subsidiaries
© 2017 Xylem, Inc.