SPECIFICATION
AWWA M11
HARNESS ASSEMBLY

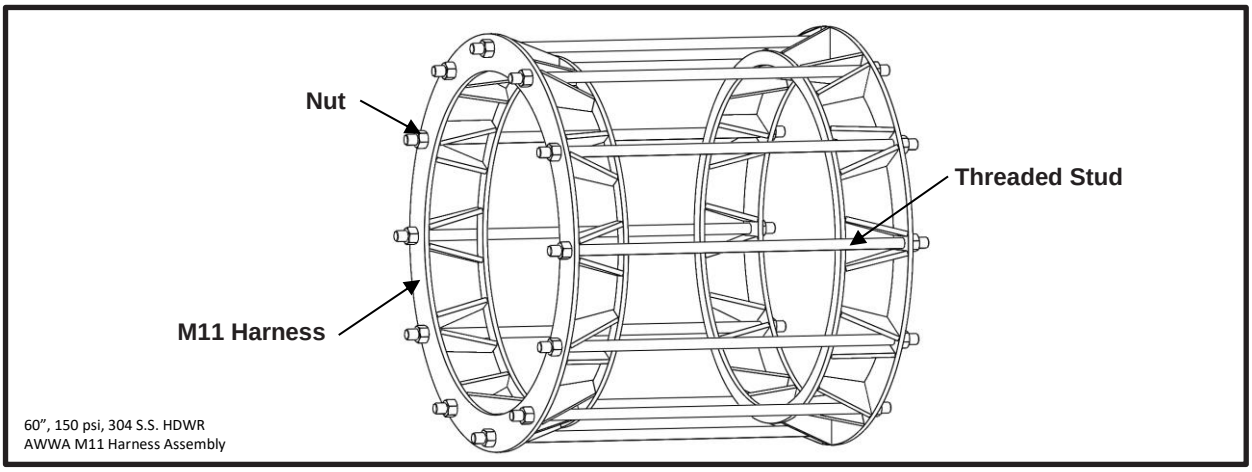

APPLICATIONS

- **Typical Uses**
  - Restraining steel pipe joints
- **Standard Pipe Sizes**
  - 6" – 144"
- **Type of Pipe**
  - Steel
- **Design Pressure**
  - 50, 100, 150, 200, and 250 psi. Higher pressure design available upon request.

MATERIALS

- **M11 Harness**
  - Carbon Steel per ASTM A36 or equivalent
  - Flexi-Coat® fusion bonded epoxy finish, if part of a fabricated assembly
  - Shop Coat Primer for field welding or bare upon request, if loose
- **Rod**
  - High Strength Low Alloy (HSLA) Steel per ASTM A193 GR B7
  - Threaded stud size and quantity specified by threaded stud material and pressure
  - Rolled threads for improved physical characteristics, greater thread accuracy, and smooth surface finish
- **Nut**
  - HSLA Steel per ASTM A194 GR 2H
  - Heavy Hex Semi-Finished

LISTINGS/STANDARDS

- Designed and fabricated per latest edition of AWWA M11 manual
- Flexi-Coat® Fusion-Bonded Epoxy Coating meets requirements of AWWA C213

OPTIONS

- Other materials of construction (e.g. 304SS, 316SS, etc.)
- Type 304 Stainless Steel hardware per ASTM A193 GR B8 and A194 GR 8
- Type 316 Stainless Steel hardware per ASTM A193 GR B8M and A194 GR 8M
- Custom rod lengths

NOTES

- Flexi-Coat® is a registered trademark of Smith-Blair
- These product specifications were correct at the time of publication and are subject to change without notice
- See the Smith-Blair® website for part numbers and ordering information
- See the Smith-Blair® website for warranty information
- See the Smith-Blair® website for corrosion warnings

30 Globe Ave, Texarkana, AR 71854
Ph: 870-773-5127 • Fax: 870-773-5212
Toll-Free Numbers: Ph: 800-643-9705 • Fax: 800-648-6792

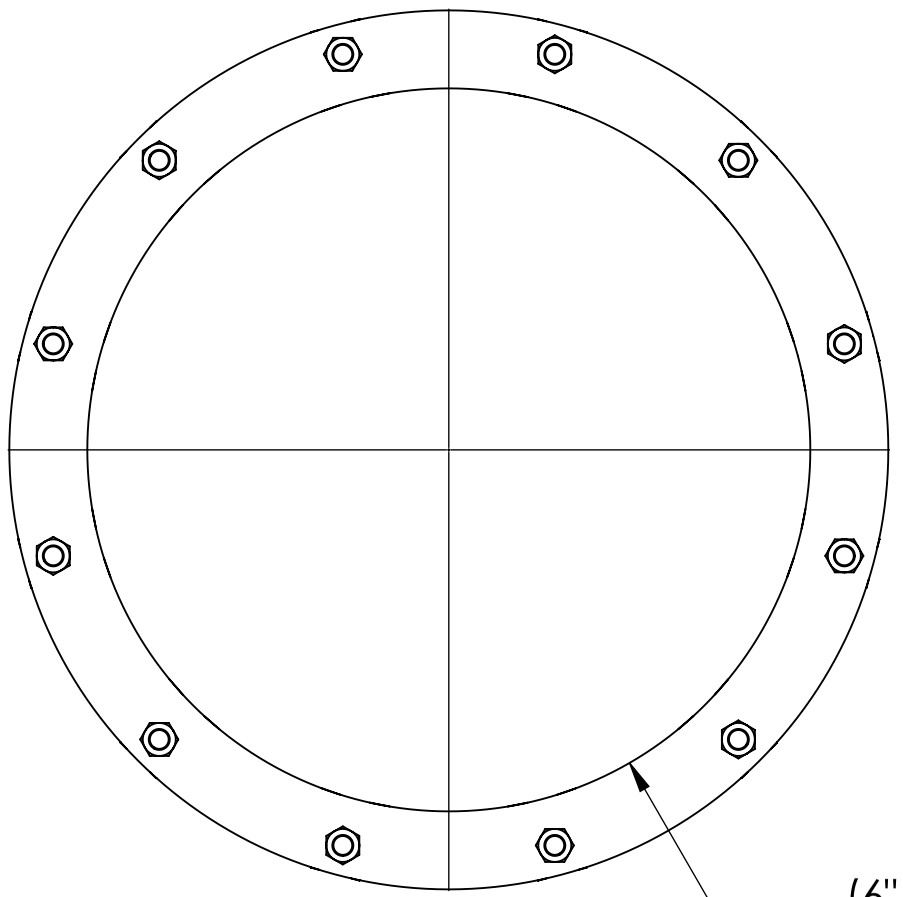

(6" - 24"): ∅ Pipe O.D. + 3/16"
(>24" - 144"): ∅ Pipe O.D. + 1/4"

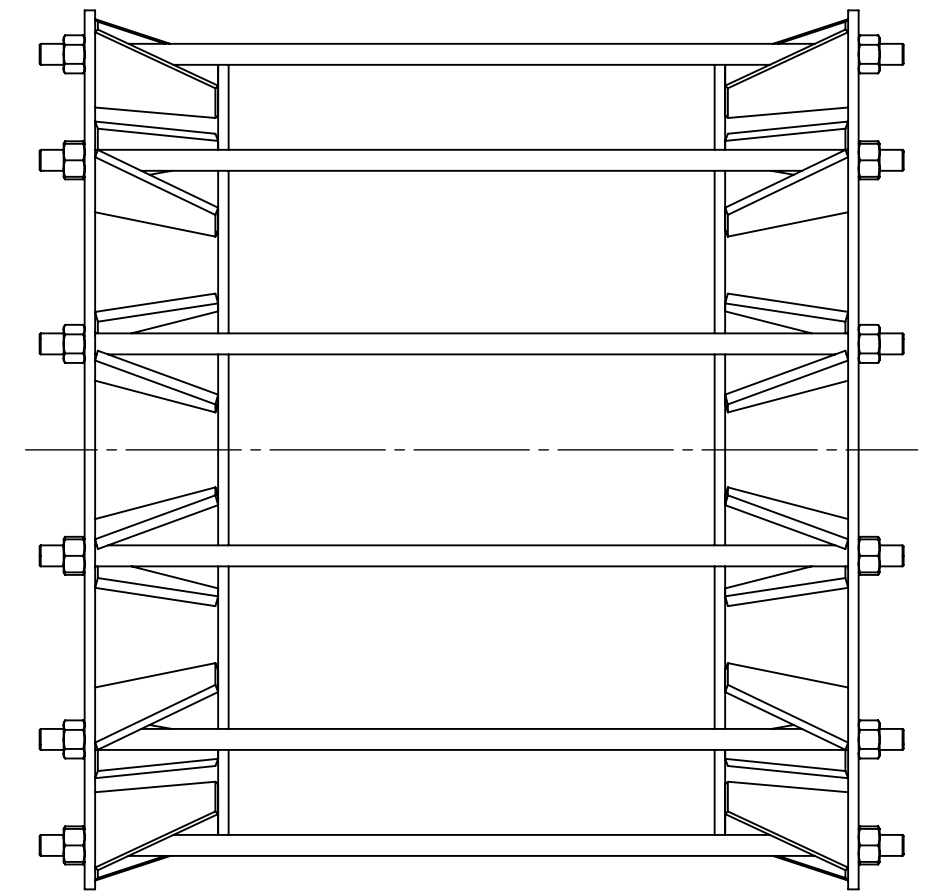

NOTES:

1. **CONSULT SMITH-BLAIR ENGINEERING FOR MORE INFORMATION**
2. **60", 150 PSI, 304 S.S. HDWR AWWA M11 HARNESS ASSEMBLY SHOWN, OTHER APPLICATIONS SIMILAR**

Sheet Size = 11 X 17

TOLERANCES U.N.O. .XX= ±.03 .XXX= ±.010 ANGLES= ±1° MACH. FIN=√125 FRACTIONS=1/16 ALL DIMENSIONS ARE IN INCHES	NOTES U.N.O. REMOVE BURRS. REMOVE SHARP EDGES. DO NOT SCALE DWG.	APP'D		DATE	
		CK'D		DATE	
	TSK NO. N/A	DRN	IKD	DATE	10/29/20
TITLE **SPECIFICATION AWWA M11 HARNESS ASSEMBLY**					
Smith-Blair a xylem brand		P/N VARIOUS			
		DWG. NO. **SPEC_M11.DRW**		3 OF 3 SHEET	10/29/20 REV.